SECTION 6
EXPLODED VIEWS

NOTE:
- -XX and -X mean standardized parts, so they may have some difference from the original one.
- Color Indication of Appearance Parts
  Example:
  KNOB, BALANCE (WHITE) . . . (RED)
  ↑ Parts Color ↑ Cabinet's Color
- Abbreviation
  AUS : Australian model
  CND : Canadian model
  JE : Tourist model
  KR : Korean model
  MY : Malaysia model
  SP : Singapore model
  TH : Thai model
- Items marked "*" are not stocked since they are seldom required for routine service. Some delay should be anticipated when ordering these items.
- The mechanical parts with no reference number in the exploded views are not supplied.
- Hardware (# mark) list is given in the last of the electrical parts list.

The components identified by mark ⚠ or dotted line with mark ⚠ are critical for safety.
Replace only with part number specified.

Les composants identifiés par une marque ⚠ sont critiquens pour la sécurité.
Ne les remplacer que par une pièce portant le numéro spécifié.

(1) GENERAL SECTION

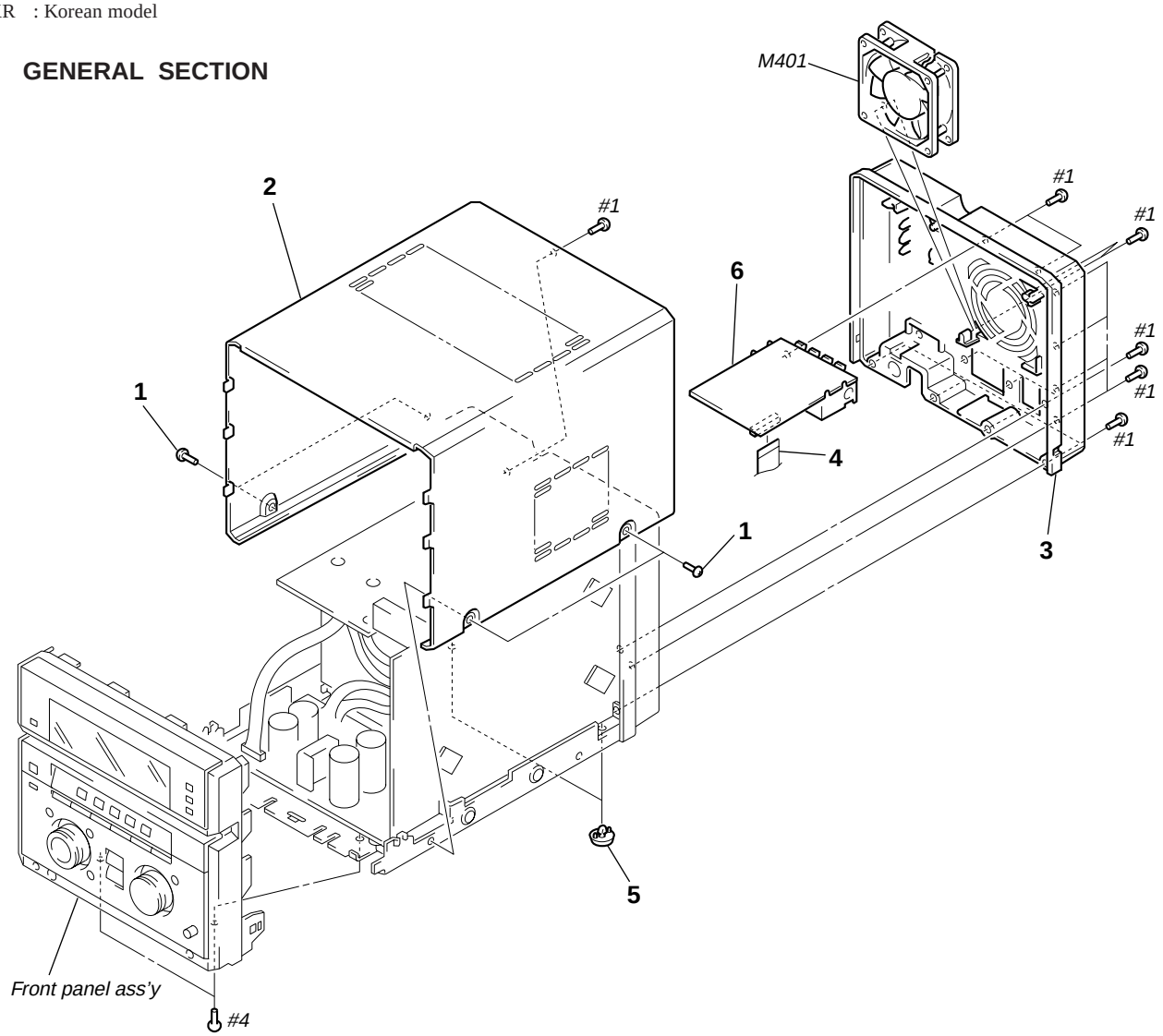

(2) FRONT PANEL SECTION

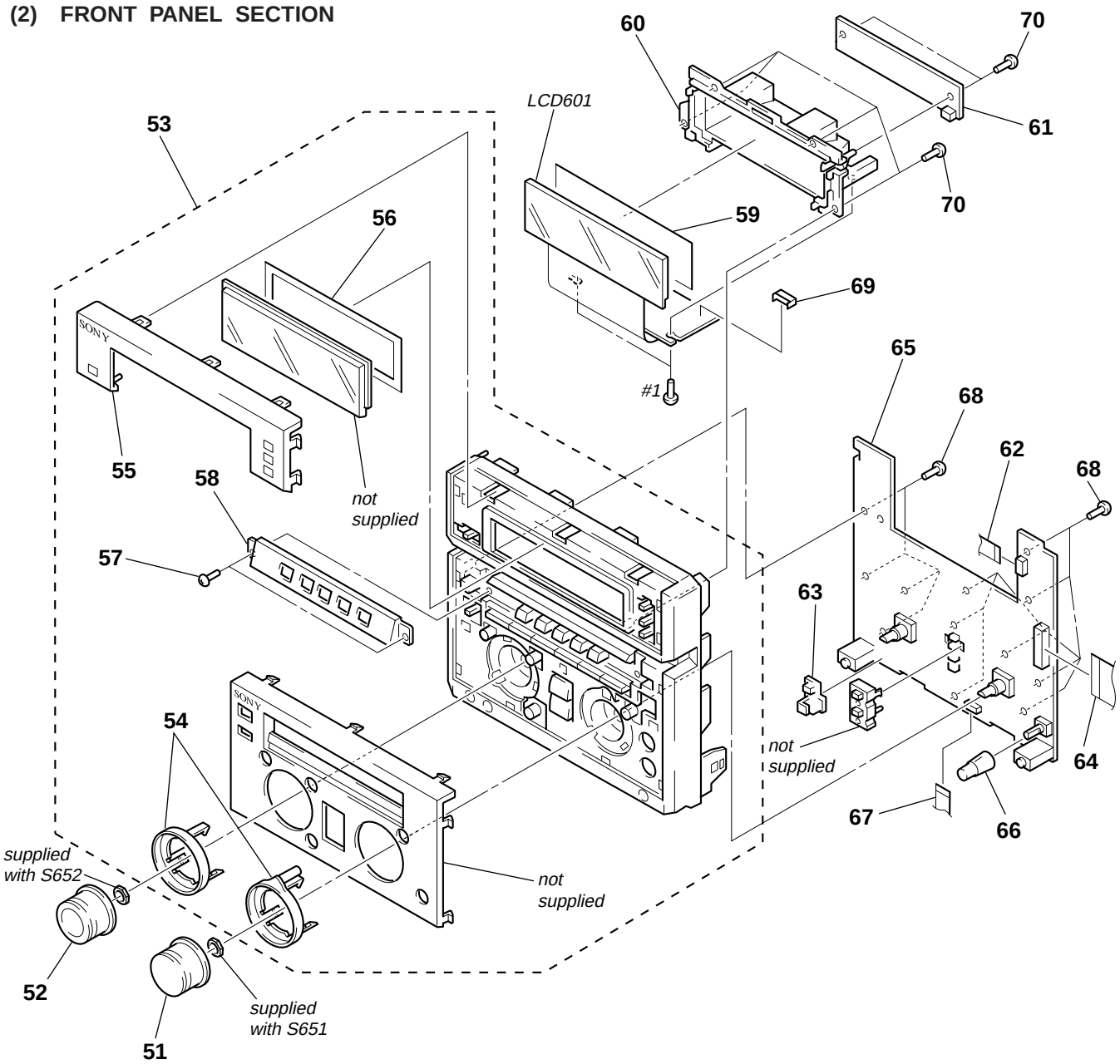
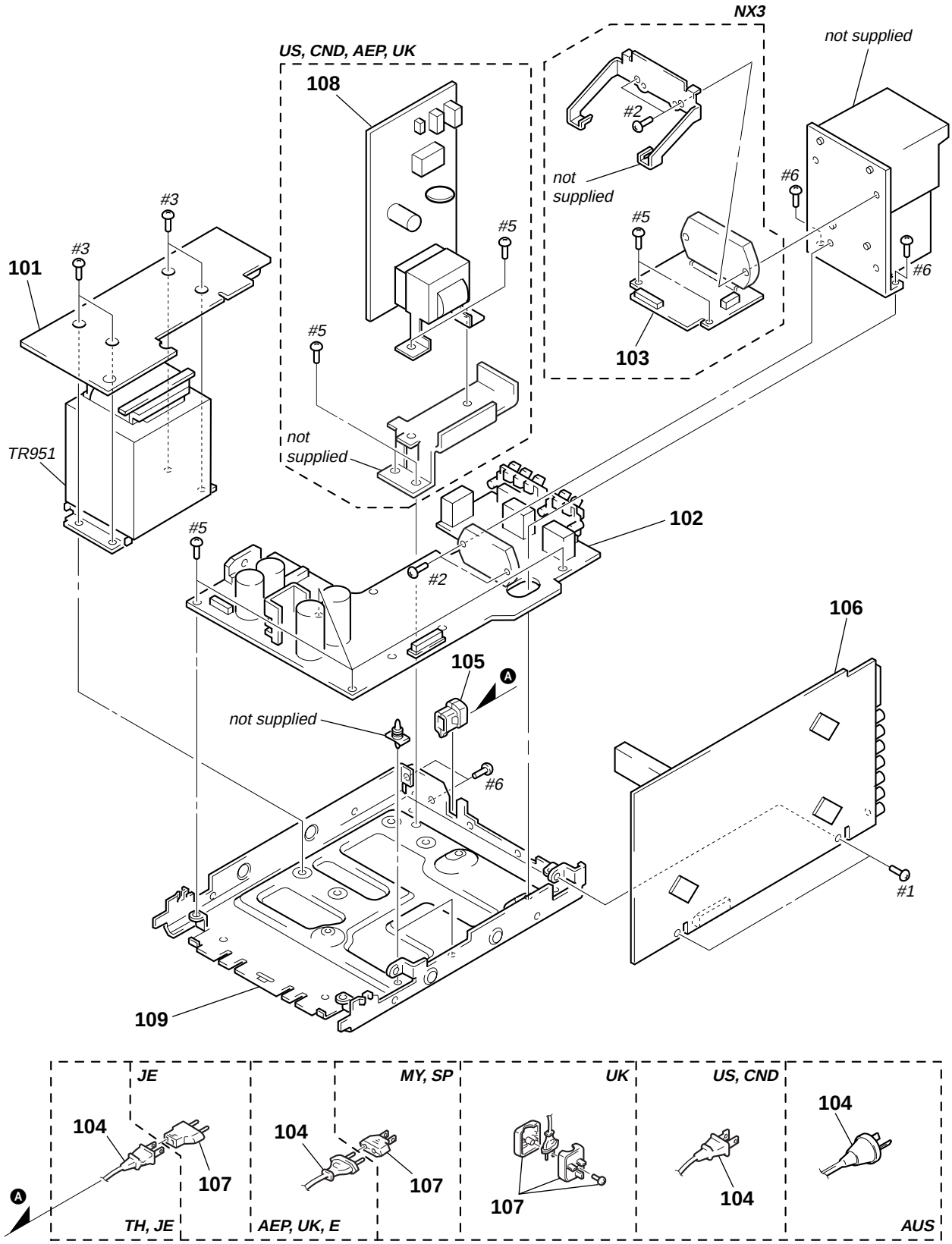
(3) CHASSIS SECTION