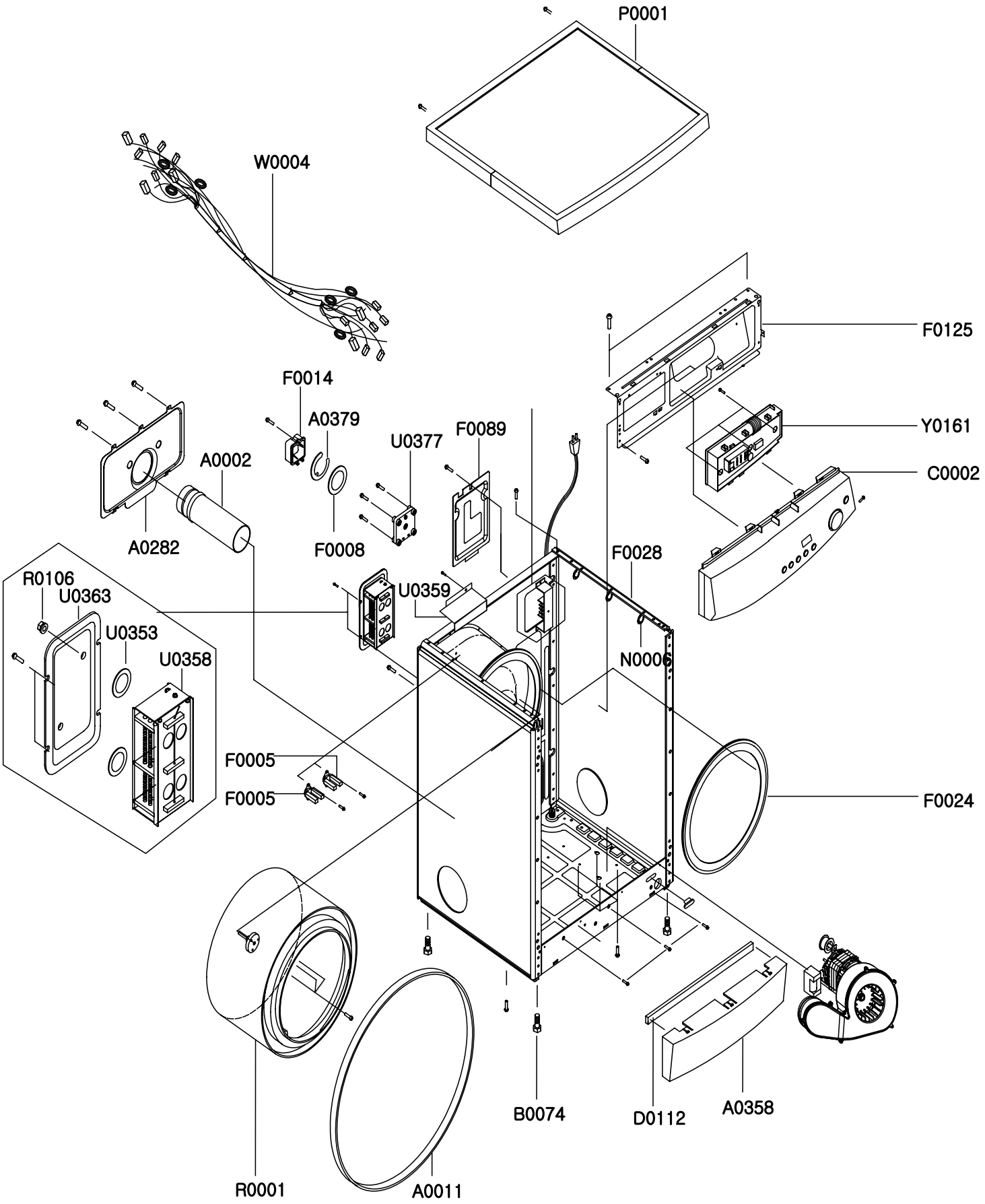
P0001
W0004
F0125
F0014
A0379
U0377
F0089
Y0161
C0002
A0002
A0282
F0008
F0028
R0106
U0363
U0359
U0353
U0358
N0006
F0005
F0005
F0024
B0074
D0112
A0358
R0001
A0011

CASE

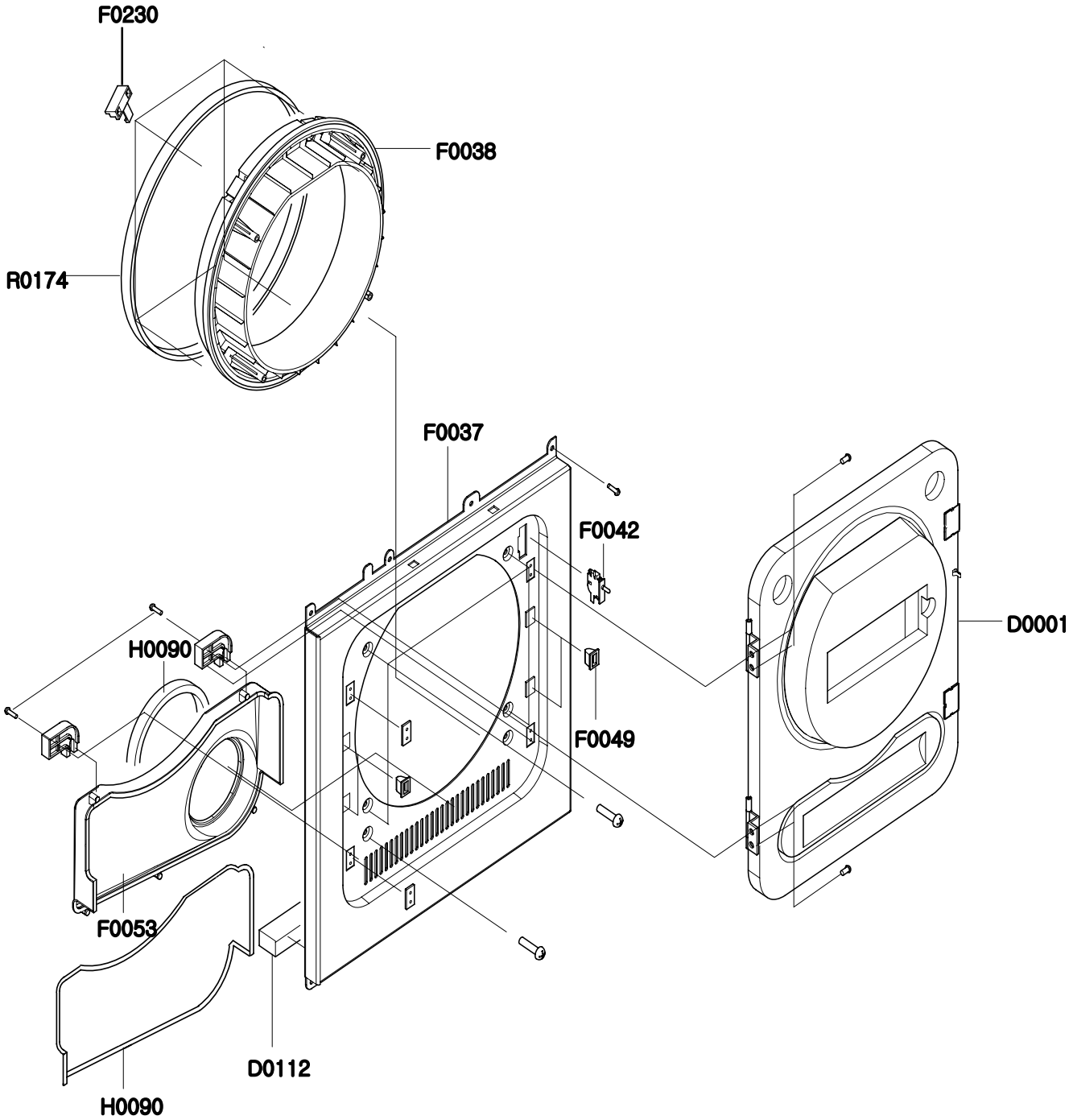
F0230
F0038
R0174
F0037
F0042
D0001
H0090
F0049
F0053
D0112
H0090

FRAME-FRONT

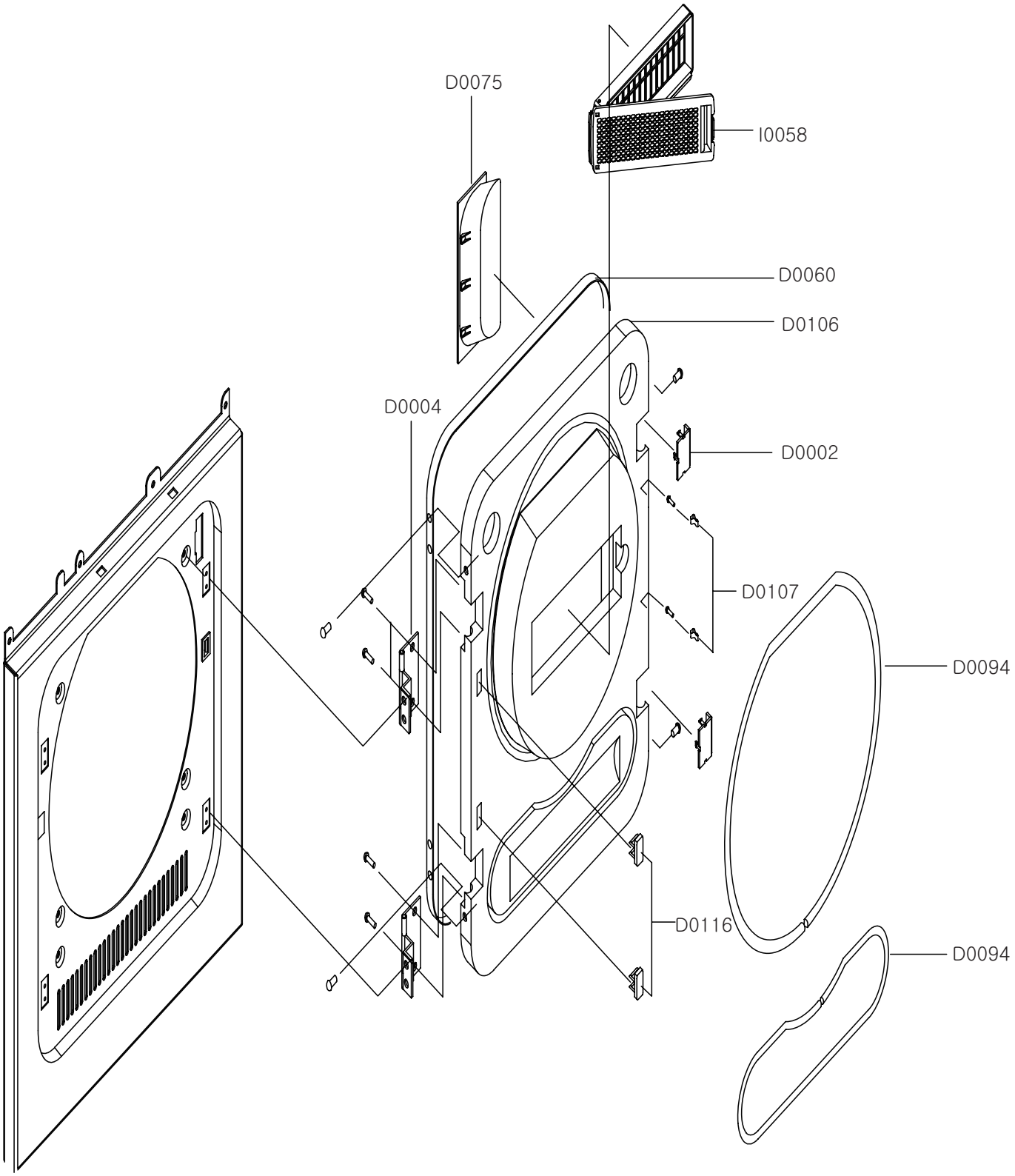
D0075
I0058
D0060
D0106
D0004
D0002
D0107
D0094
D0116
D0094

ASSY-DOOR

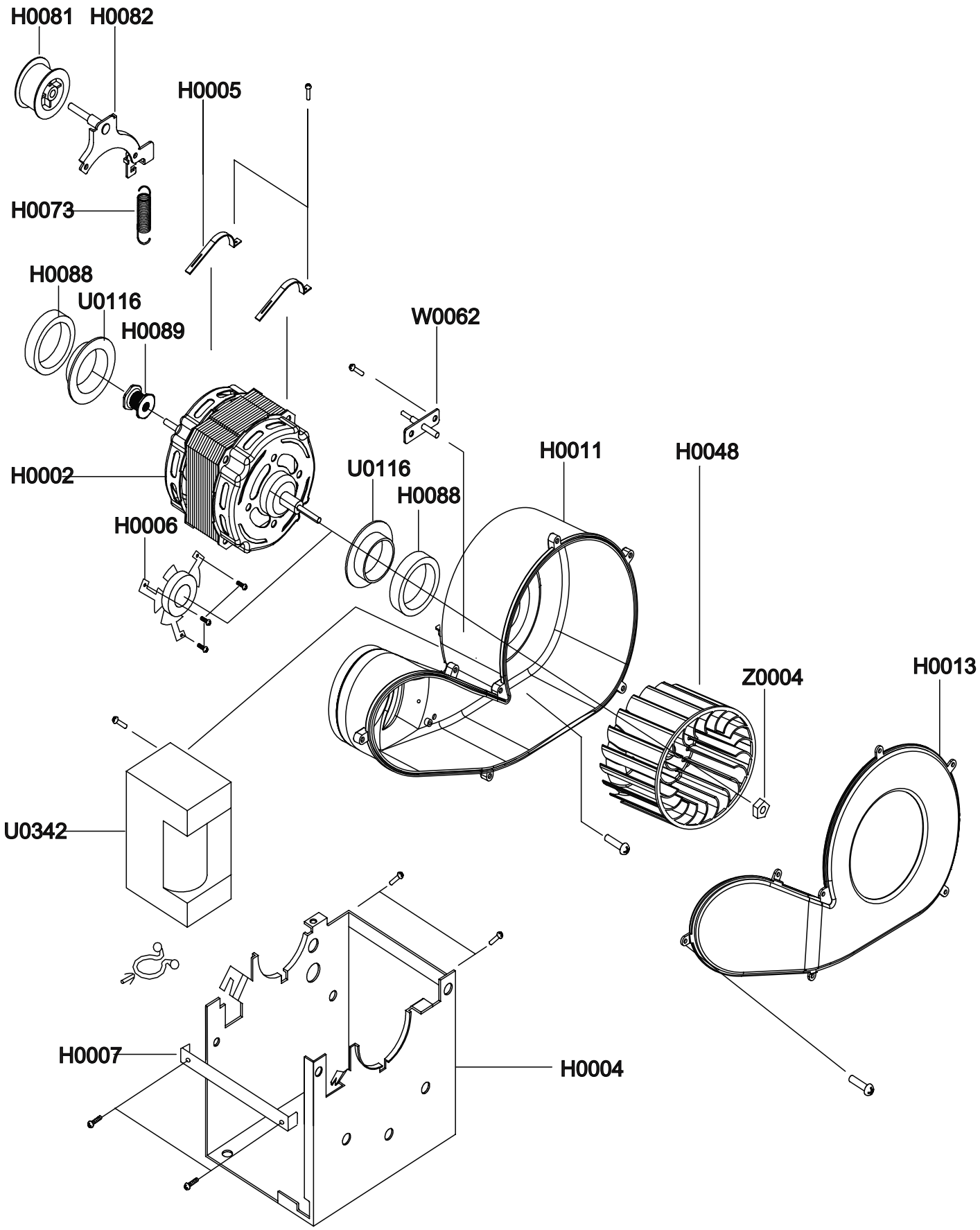

ASSY MOTOR-DUCT