1. HW-N650/XS (ZZ01)

Exploded View

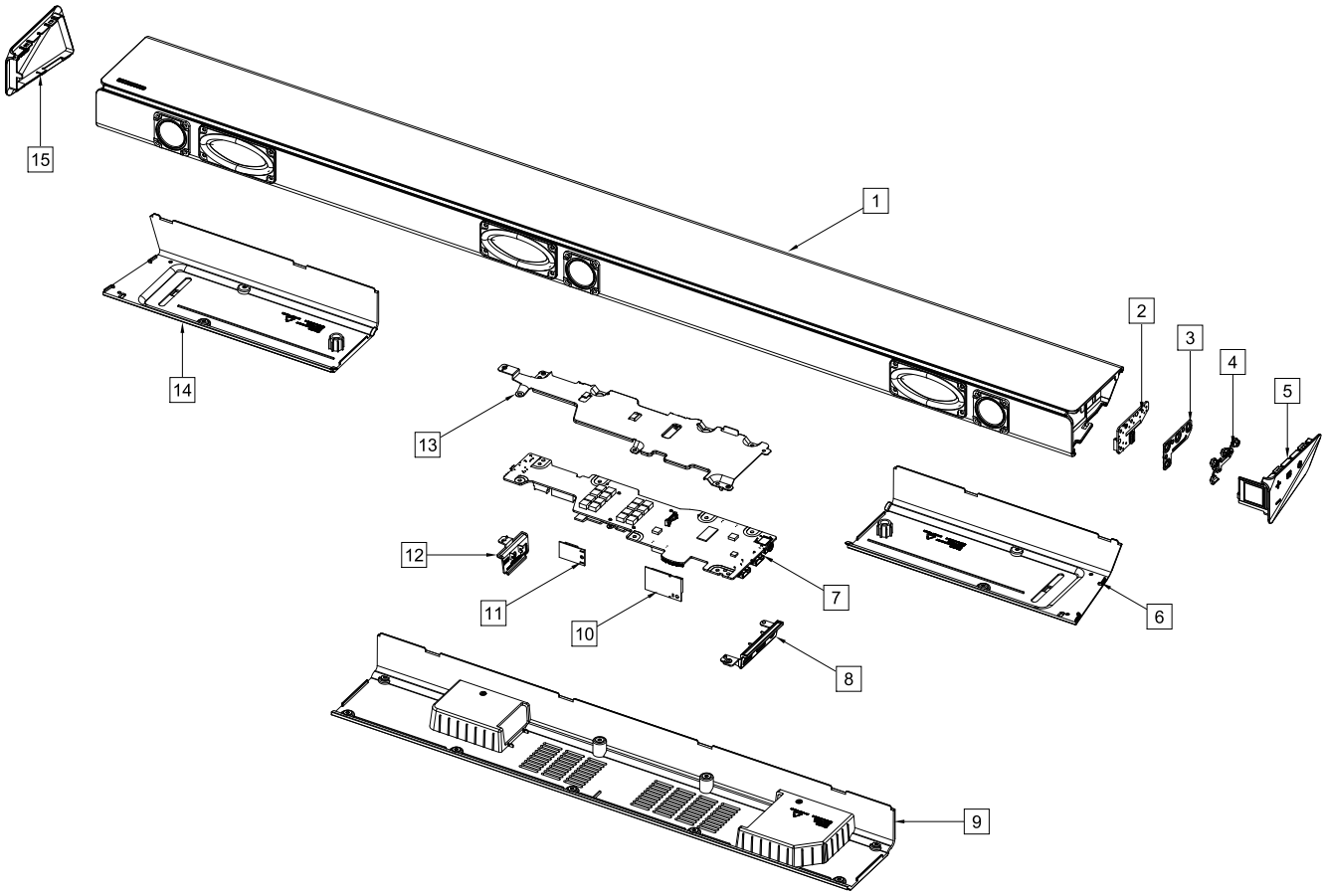

Copyright© 1995-2018 SAMSUNG. All rights reserved.