1. Title
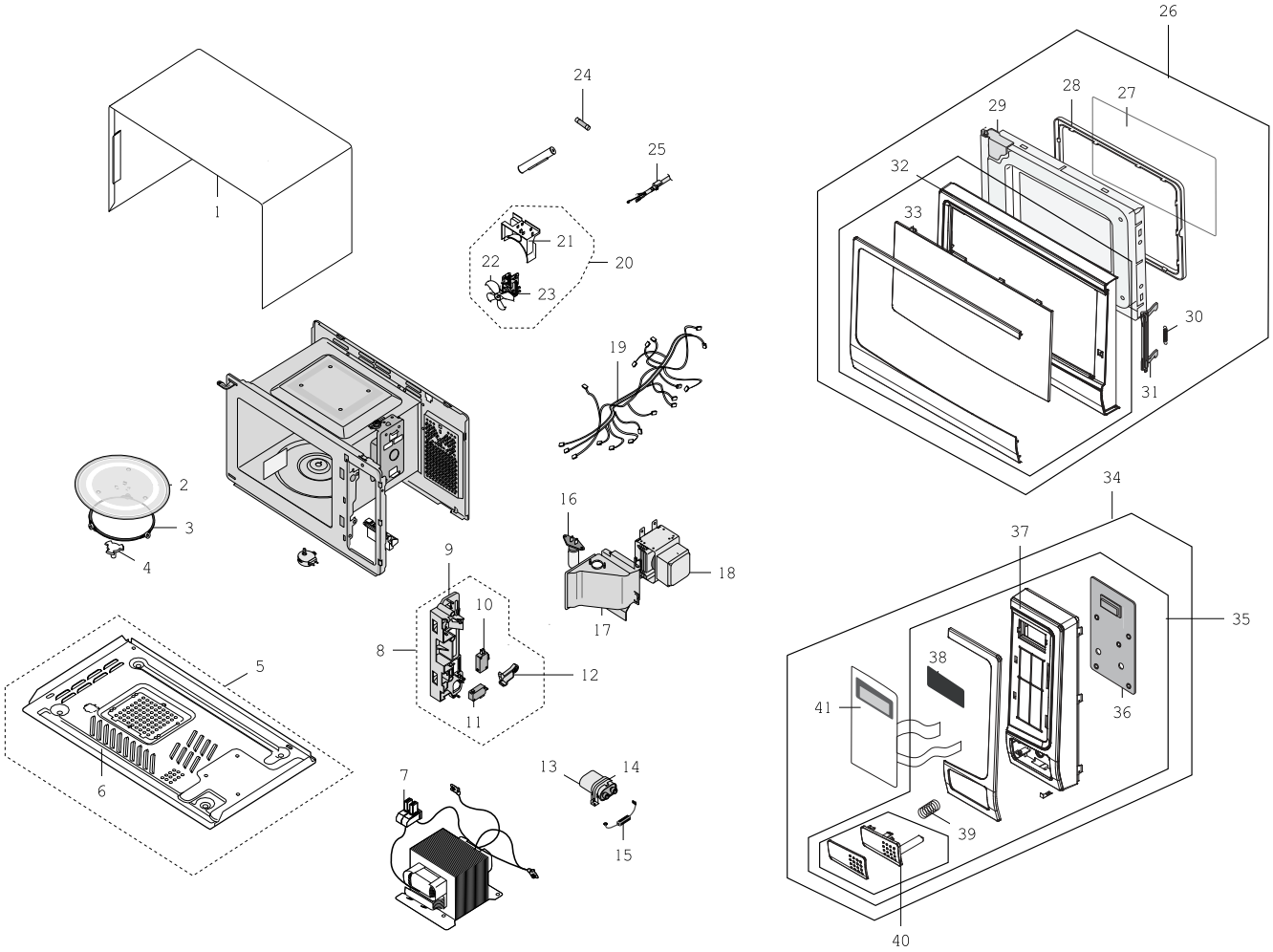
Exploded View