MODEL: EDC2086GDW

EX. VIEW
FUNCTIONAL ASSEMBLY

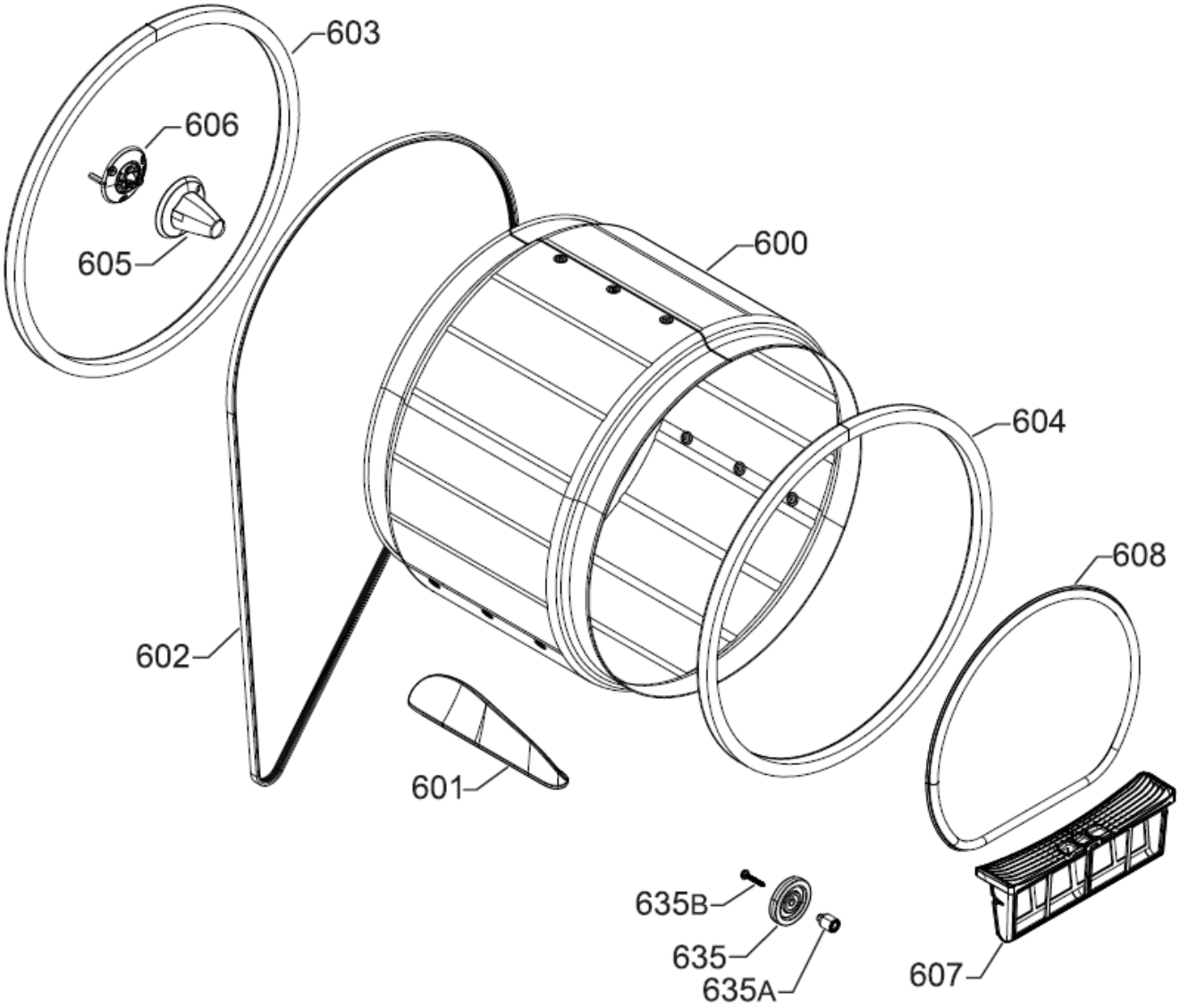

MODEL: EDC2086GDW

EX. VIEW
CABINET ASSEMBLY

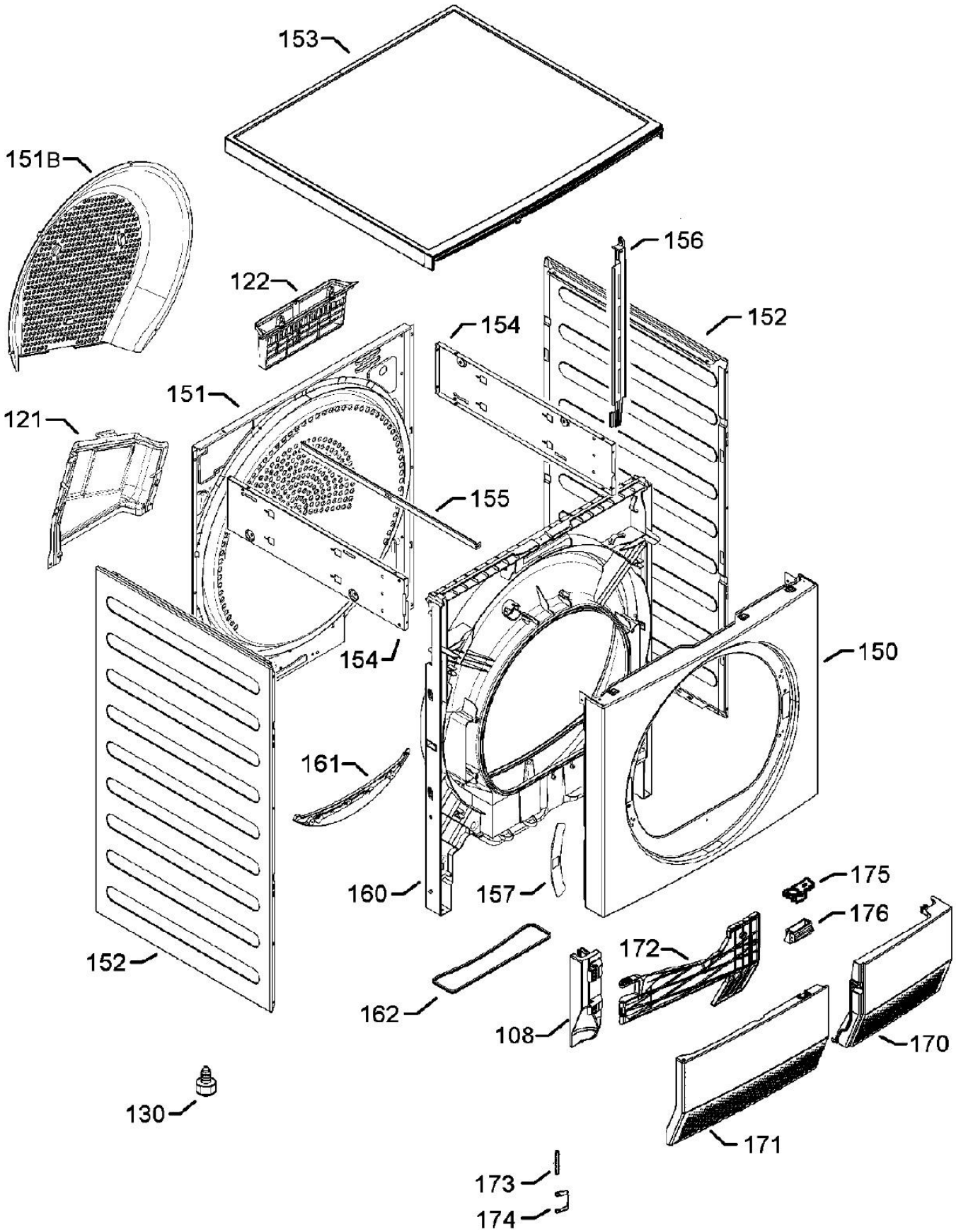

MODEL: EDC2086GDW **EX. VIEW**

ELECTRICAL EQUIPMENT ASSEMBLY

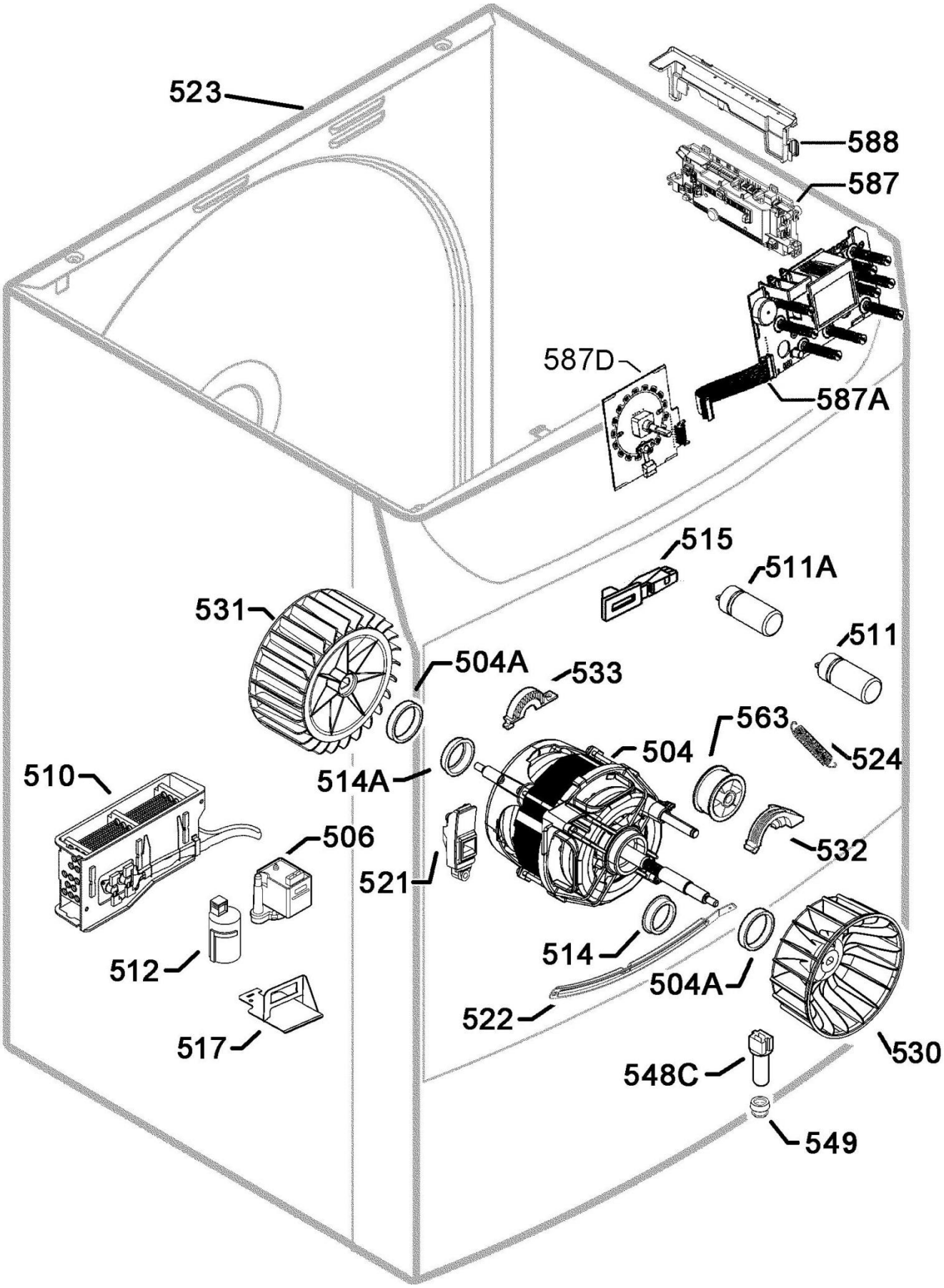

MODEL: EDC2086GDW

EX. VIEW
CONTROL PANEL ASSEMBLY

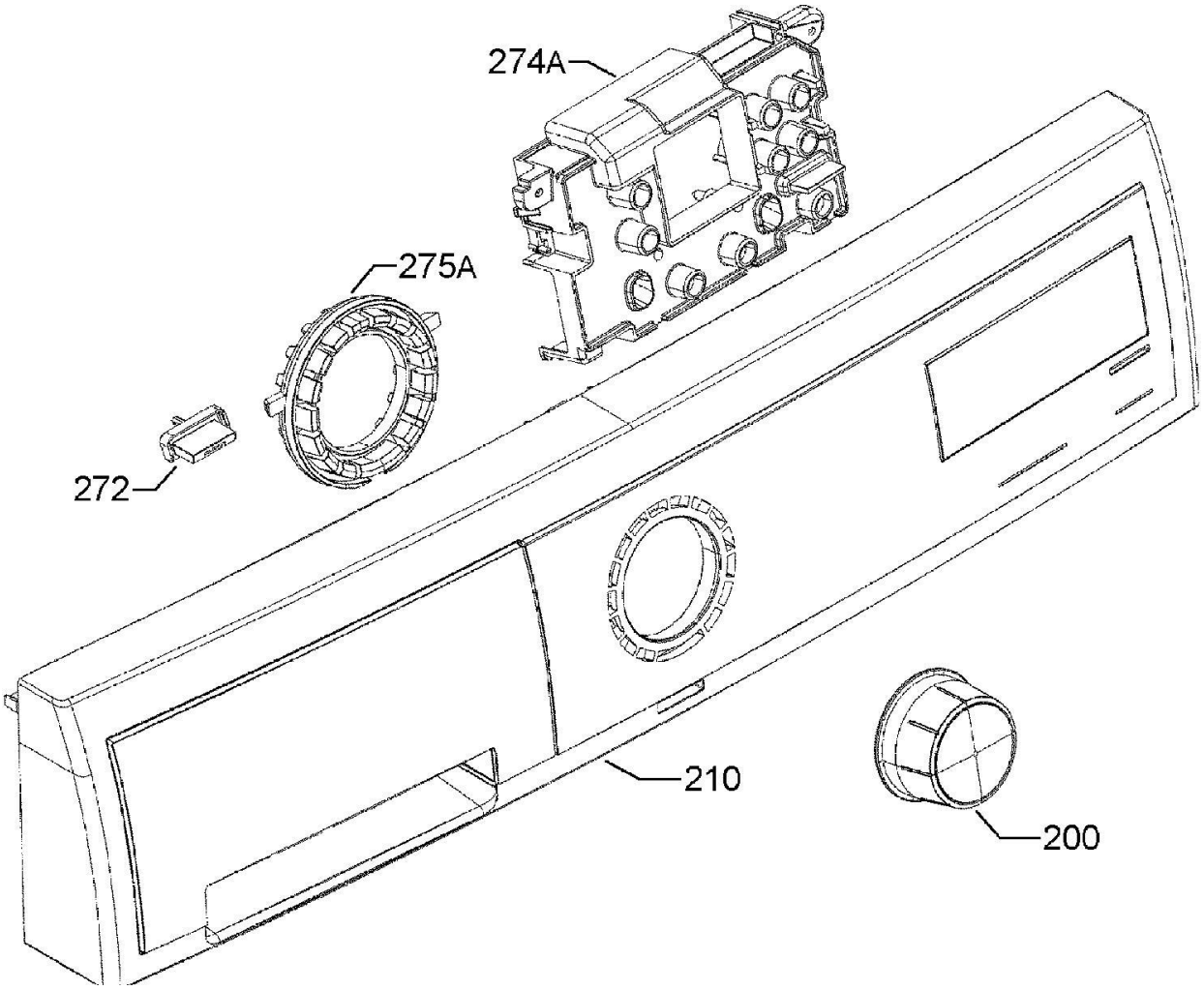

MODEL: EDC2086GDW

EX. VIEW
DOOR ASSEMBLY

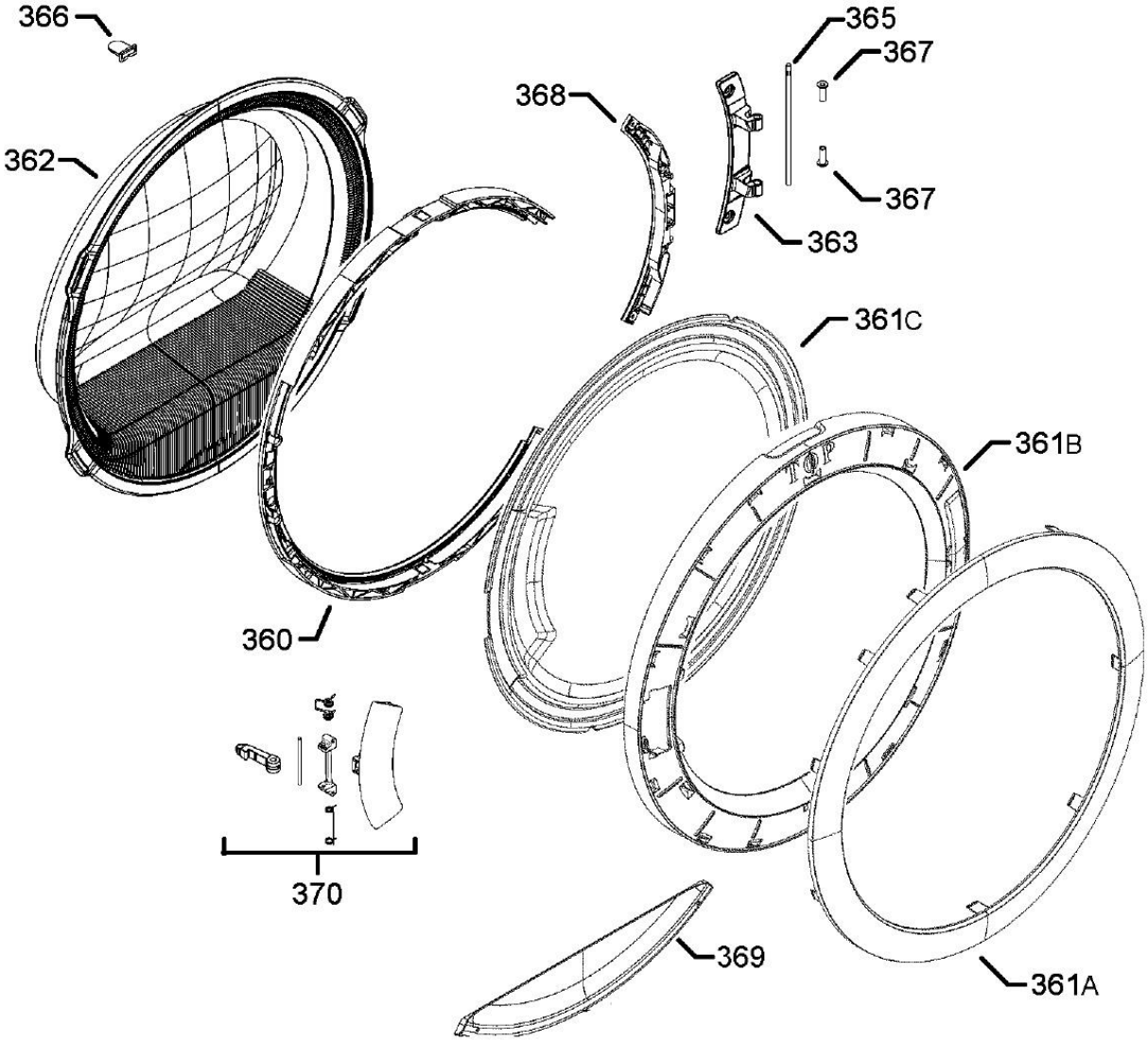

MODEL: EDC2086GDW
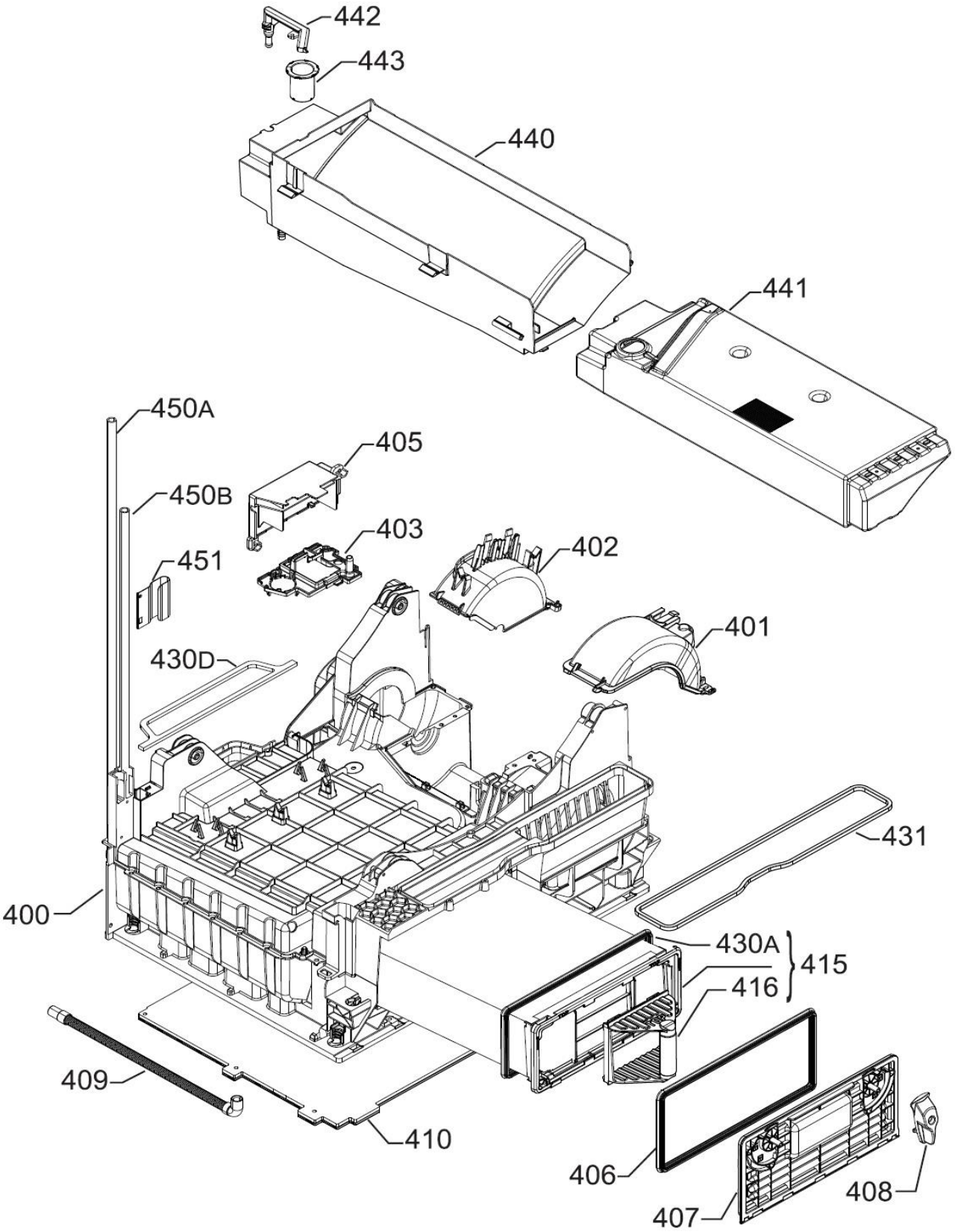
EX. VIEW
BASE ASSEMBLY