8. Part exploded view and replacement part list

8.1 Partexploded view- Gard seri

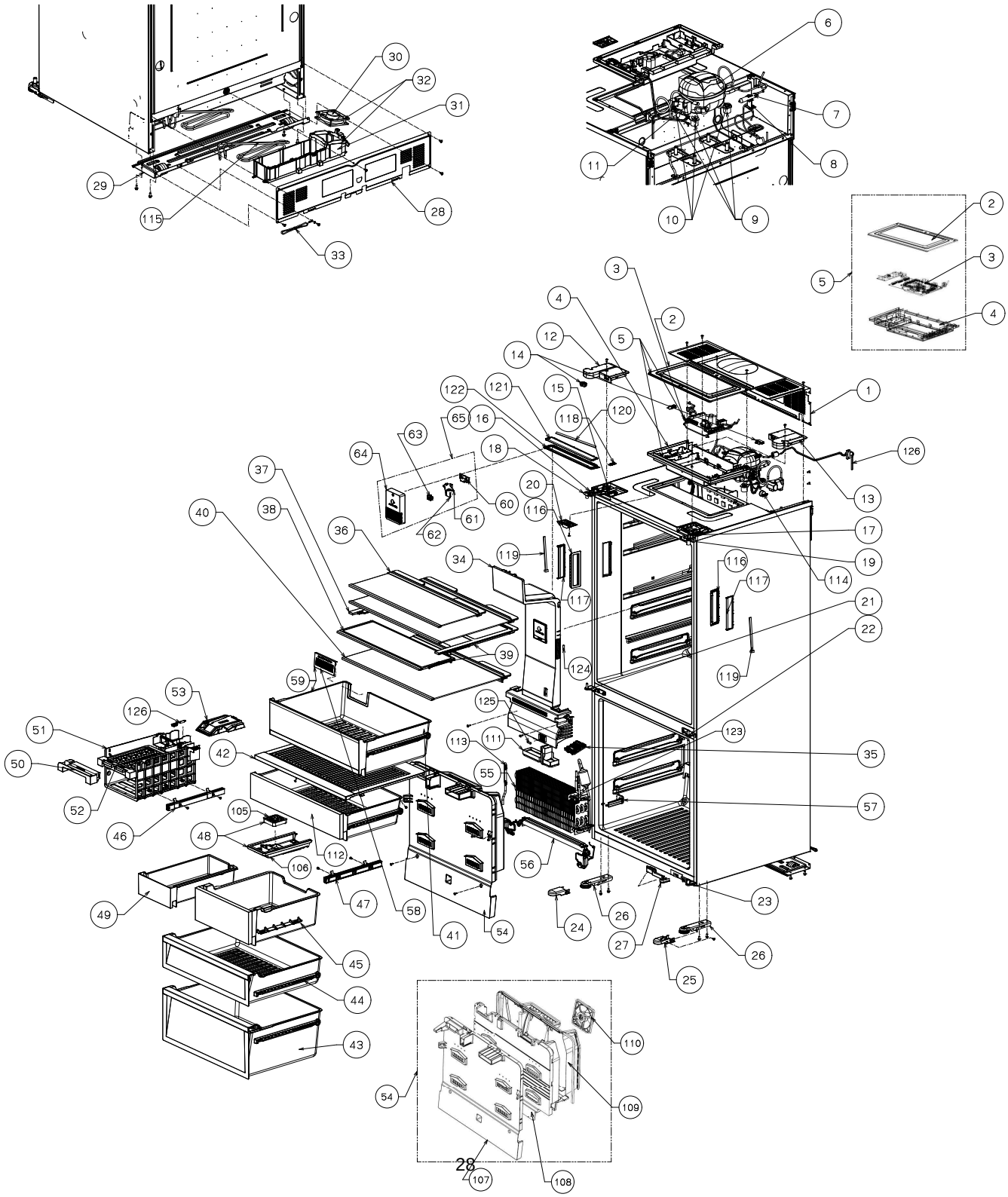

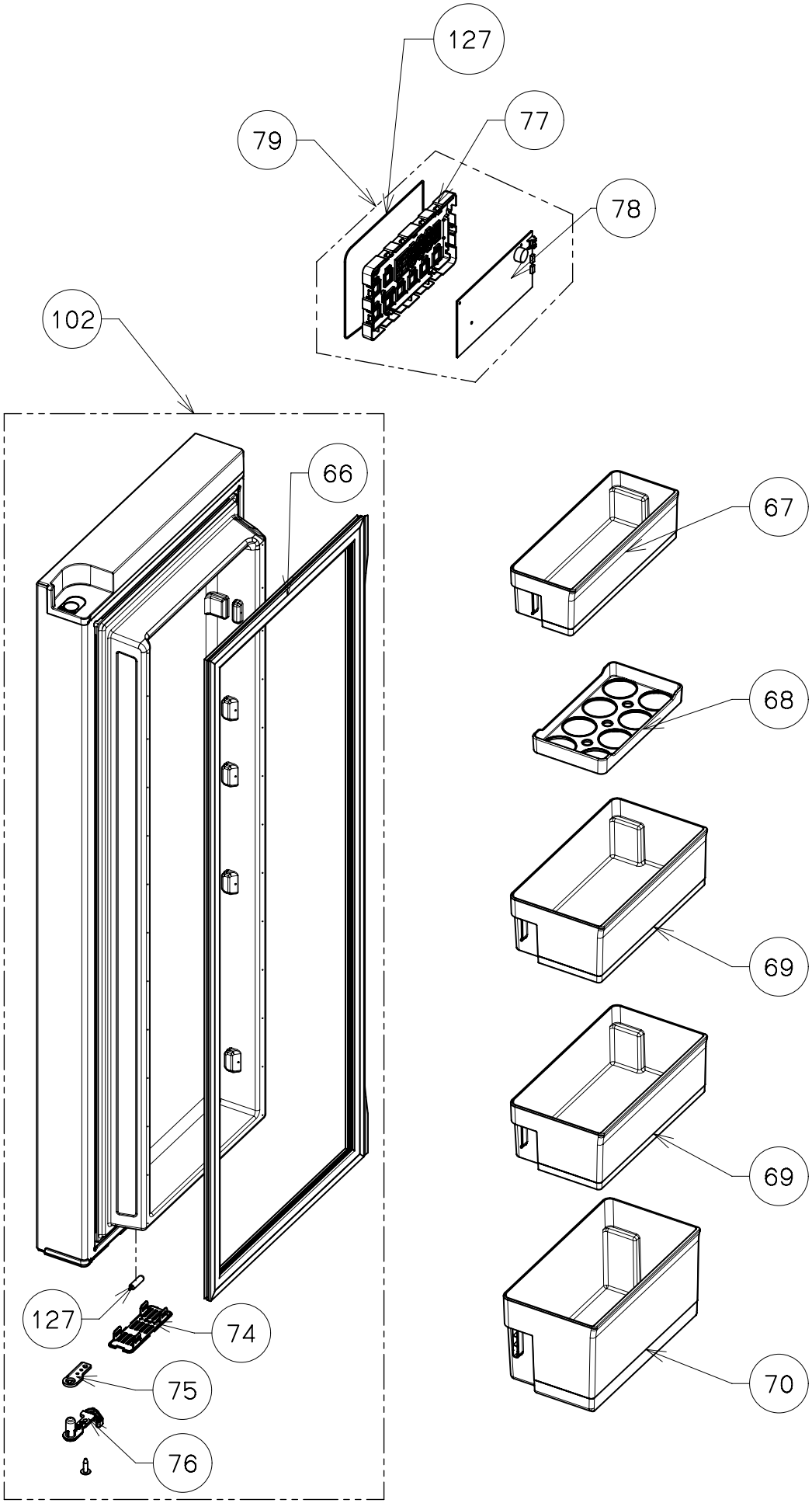
127
79
77
78
102
66
67
68
69
69
70
127
74
75
76

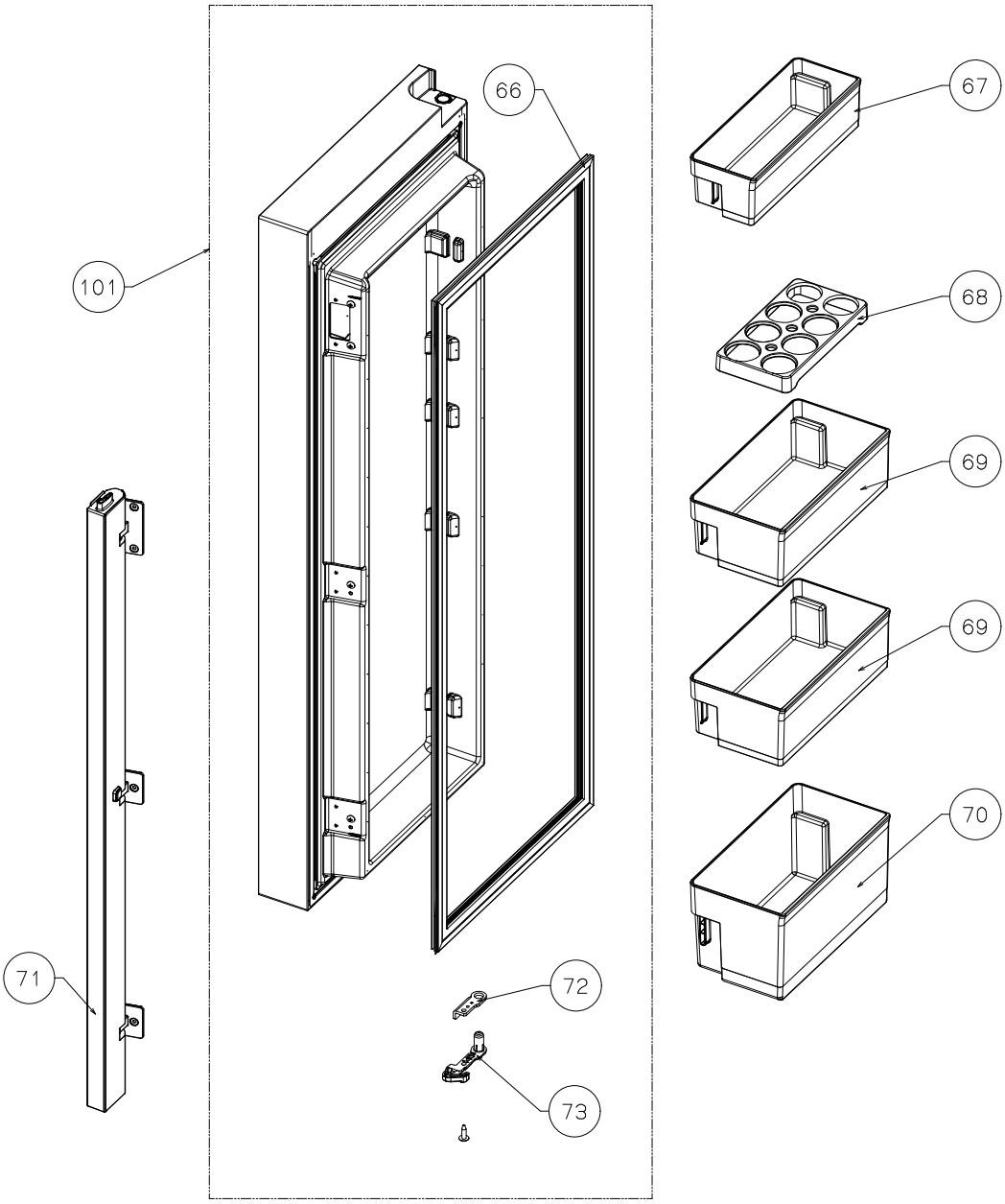
66
67
101
68
69
69
70
71
72
73

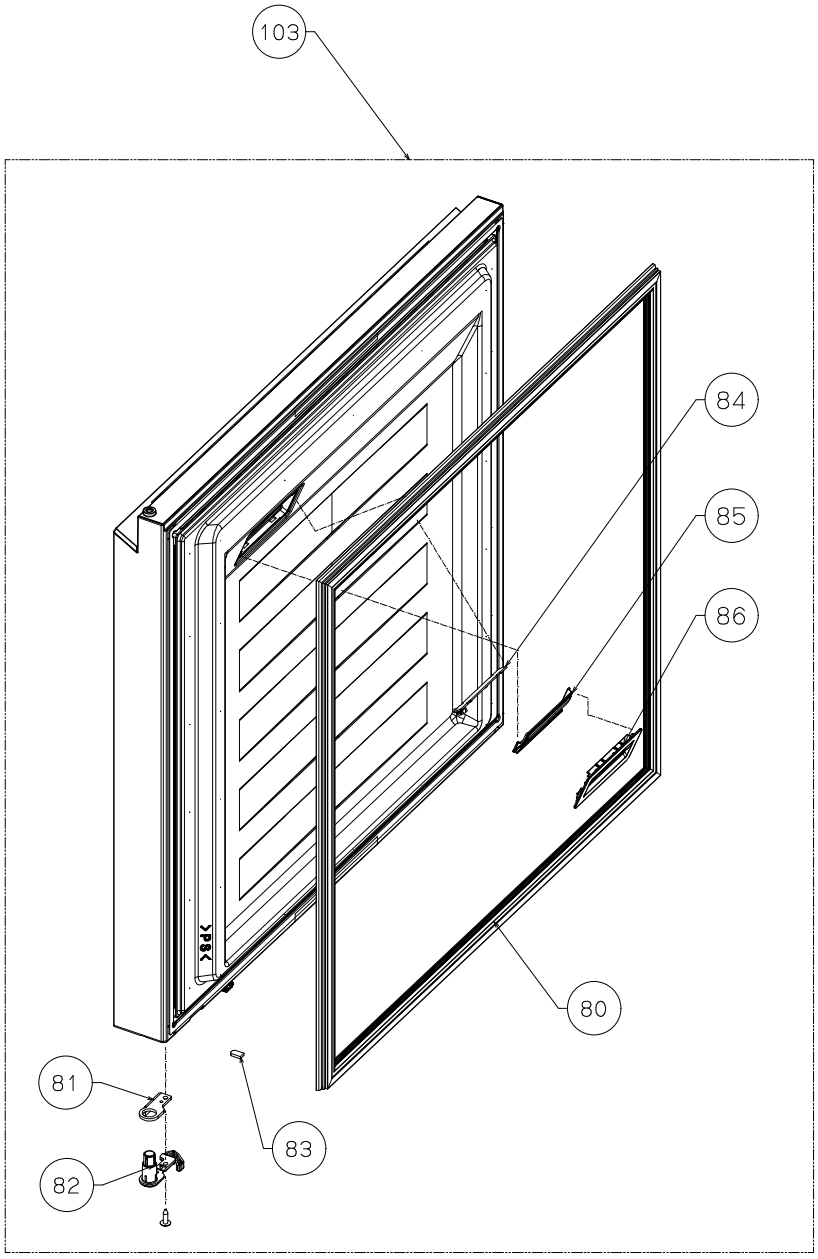
103
84
85
86
80
81
83
82

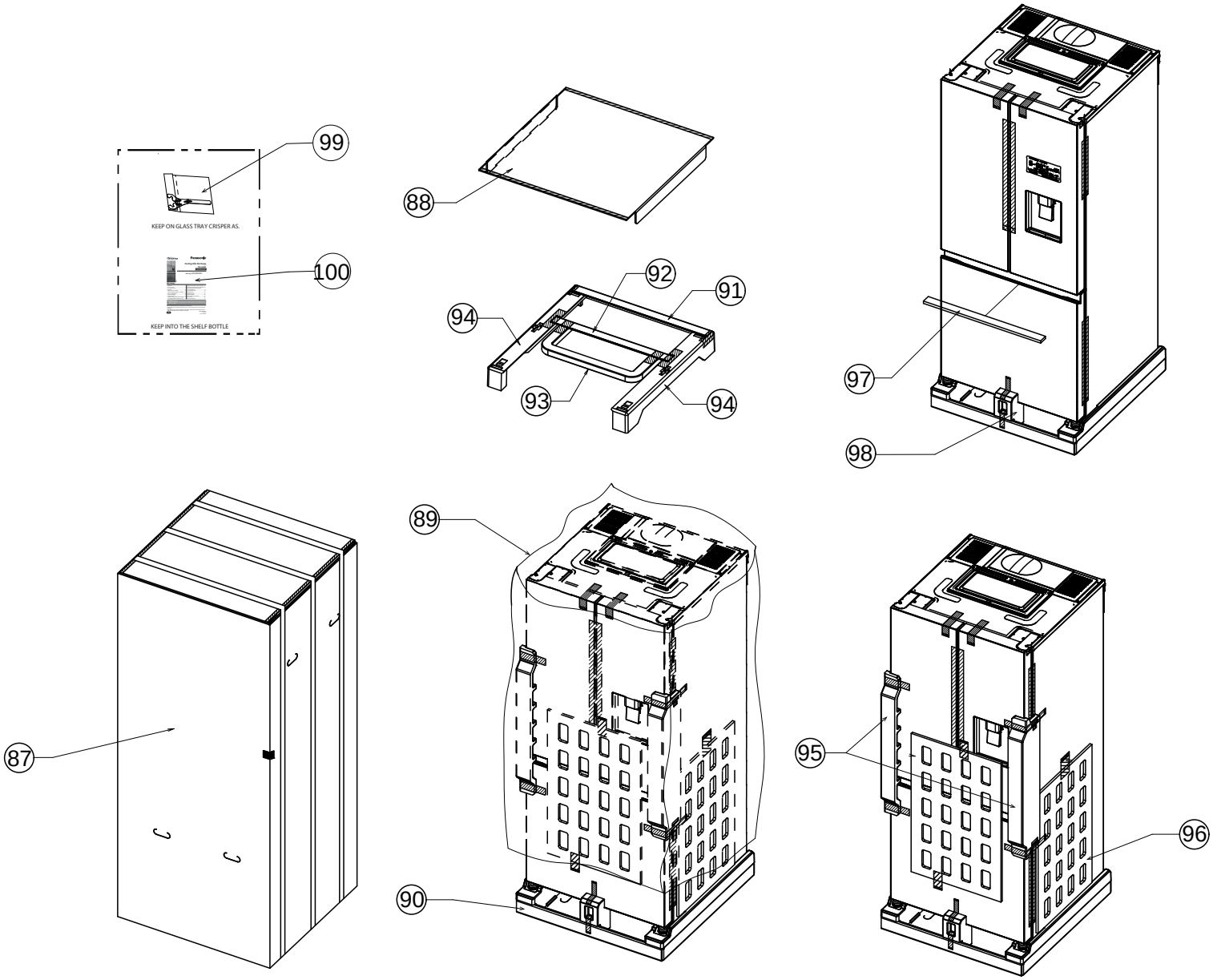
99
KEEP ON GLASS TRAY CRISPER AS.
100
KEEP INTO THE SHELF BOTTLE
88
92
91
94
93
94
97
98
87
89
90
95
96