10. EXPLODED VIEW & REPLACEMENT PARTS LIST

▶ MODEL : GN-B332P**B/K, GN-B312P**B/K

▼ The parts of refrigerator and the shape of each part are subject to change in different localities.
▼ Capacitors and fuse are optional parts.

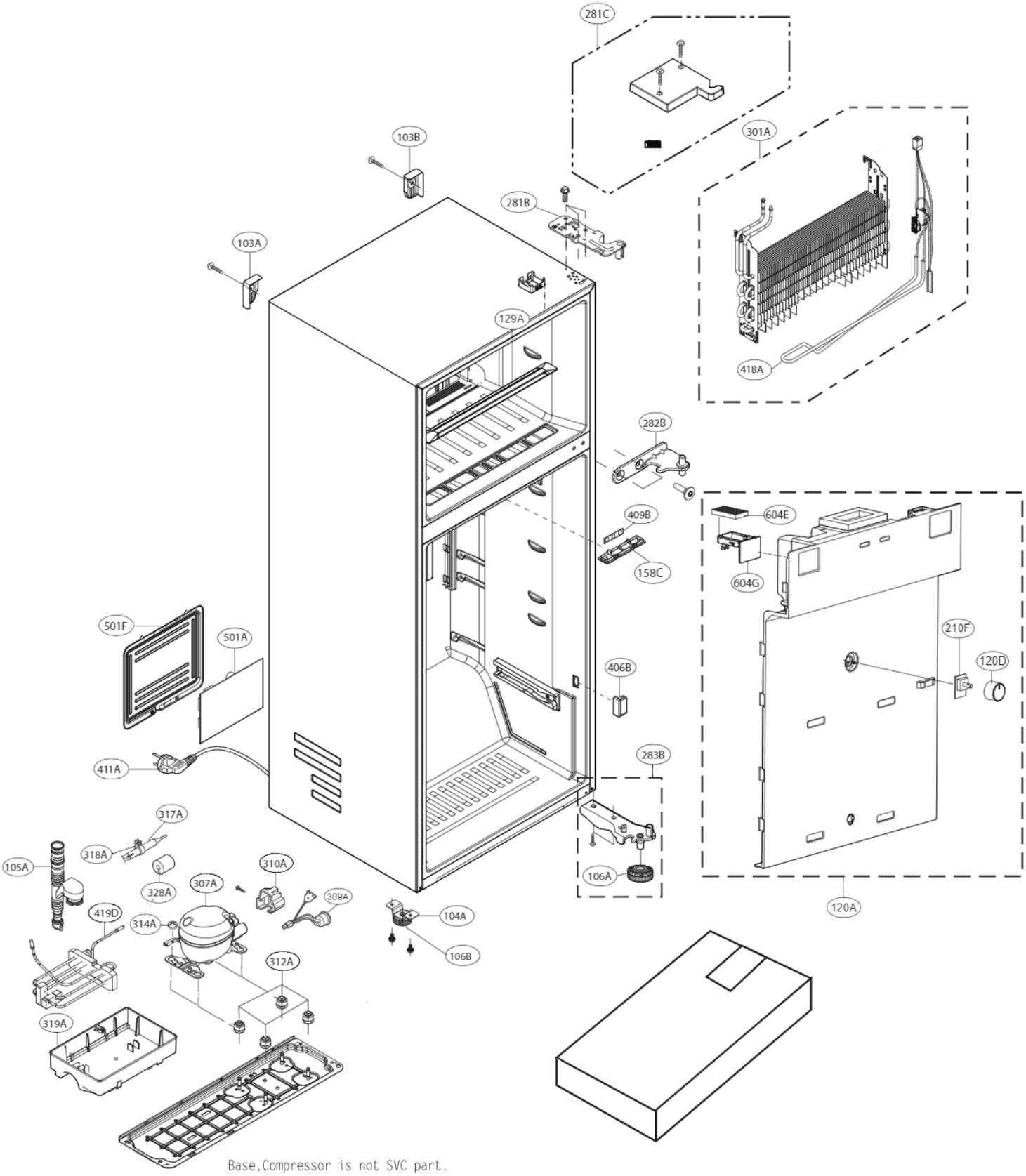

Copyright © 2021-2022 LG Electronics Inc. All rights reserved. Only training and service purposes.

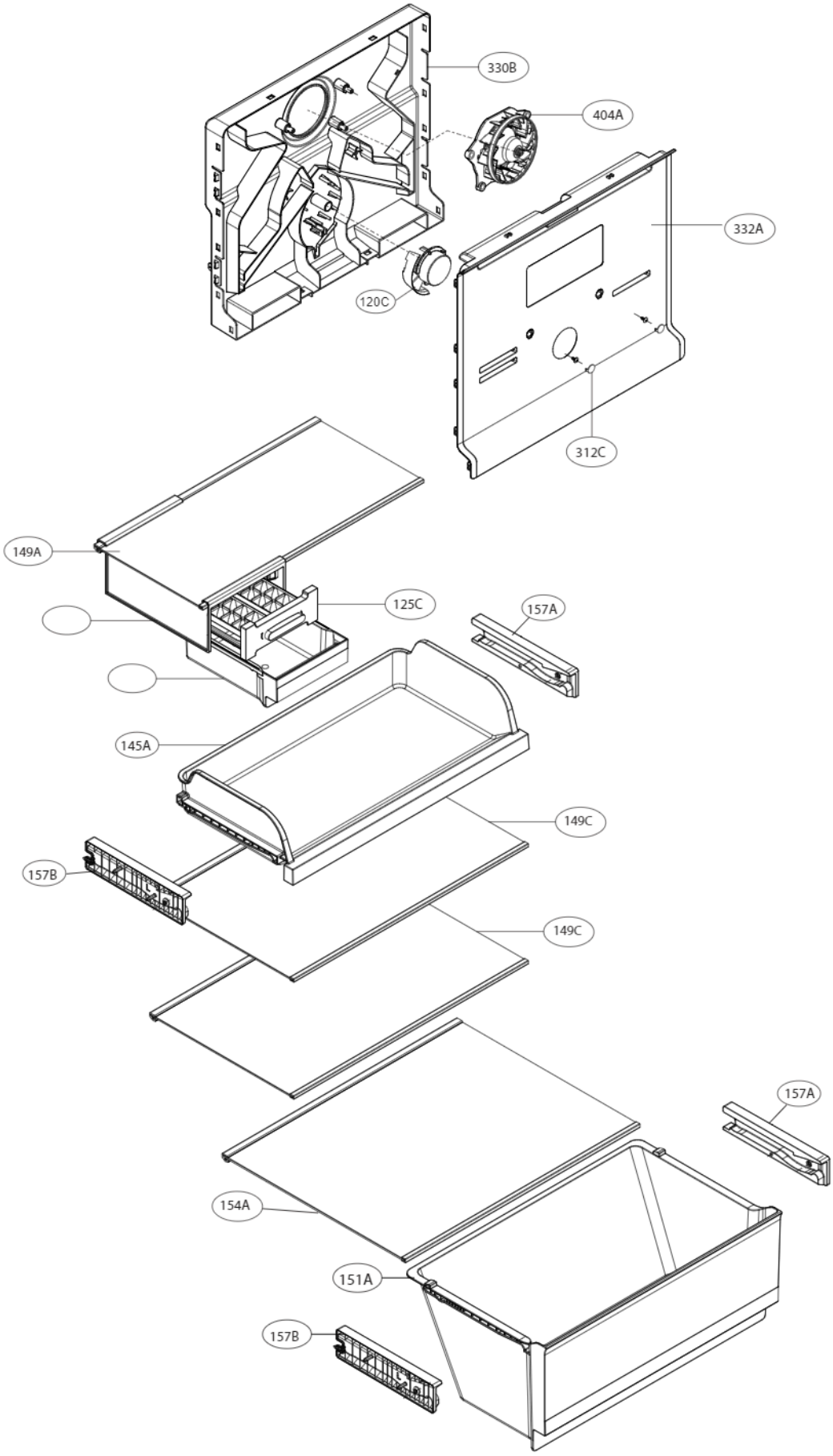

Copyright © 2021-2022 LG Electronics Inc. All rights reserved. Only training and service purposes.

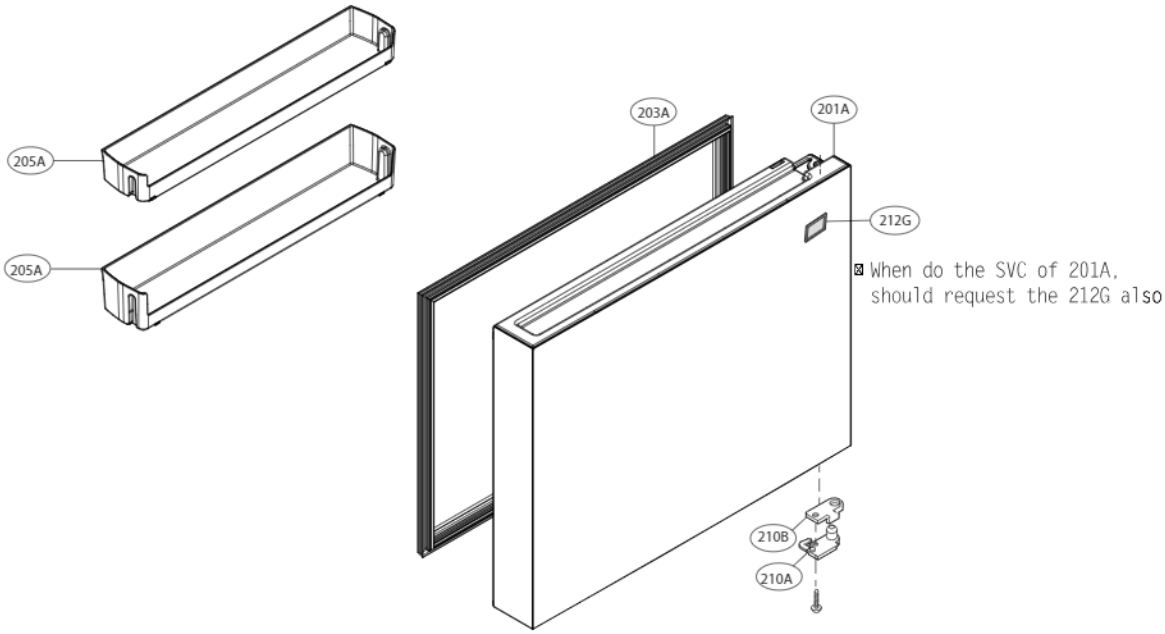

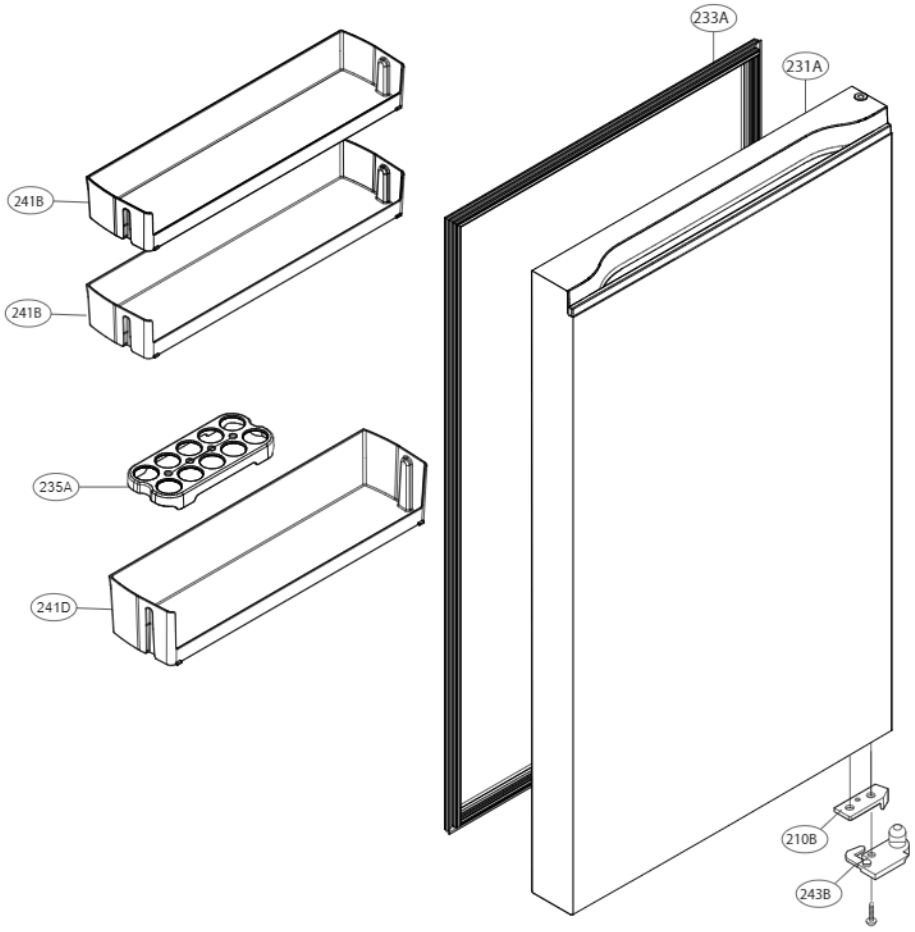

Copyright © 2021-2022 LG Electronics Inc. All rights reserved. Only training and service purposes.