Electrolux

**ELECTROLUX HOME PRODUCTS PTY LTD**
**ABN 51 004 762 341**

| | |
|---|---|
| **Technical Publication Nº RE342** | **Issue: 1**<br>**Date: 11/13** |

# *ELECTROLUX*

## *ELECTRONIC ICE & WATER*

## *BOTTOM MOUNT*

## *THREE DOOR*

## *STAINLESS STEEL 4*

## *REFRIGERATOR*

***MODEL***

**EHE5167SB**
**PNC 925042816**

© Copyright 2013 ELECTROLUX HOME PRODUCTS PTY LTD Technical Services

**MODEL: EHE5167SB**

**EX. VIEW DRAWING 8132**
**CONTROL HOUSINGS**

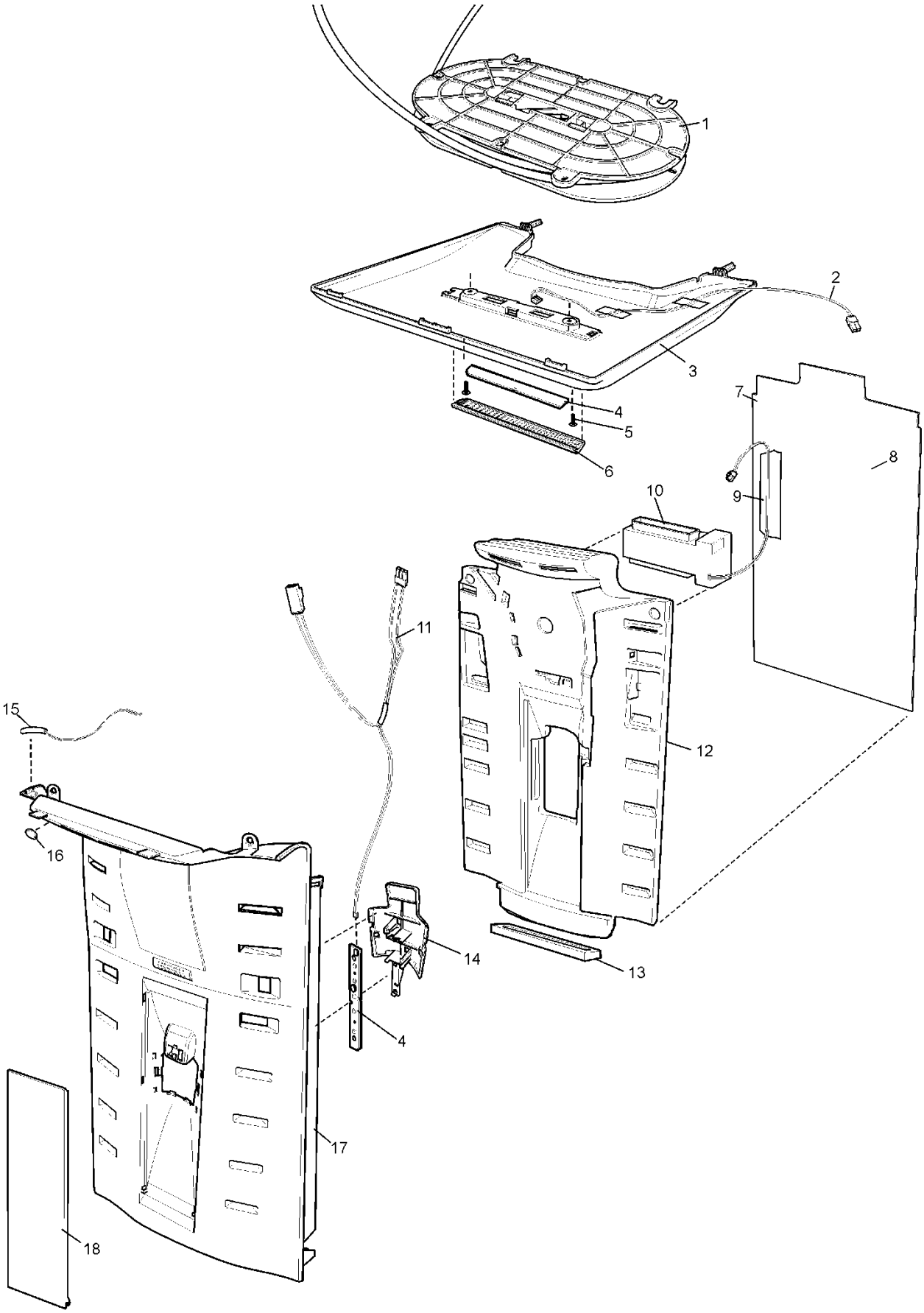

**MODEL: EHE5167SB**

**EX. VIEW DRAWING 8133**
**FC DOOR ASSEMBLIES**

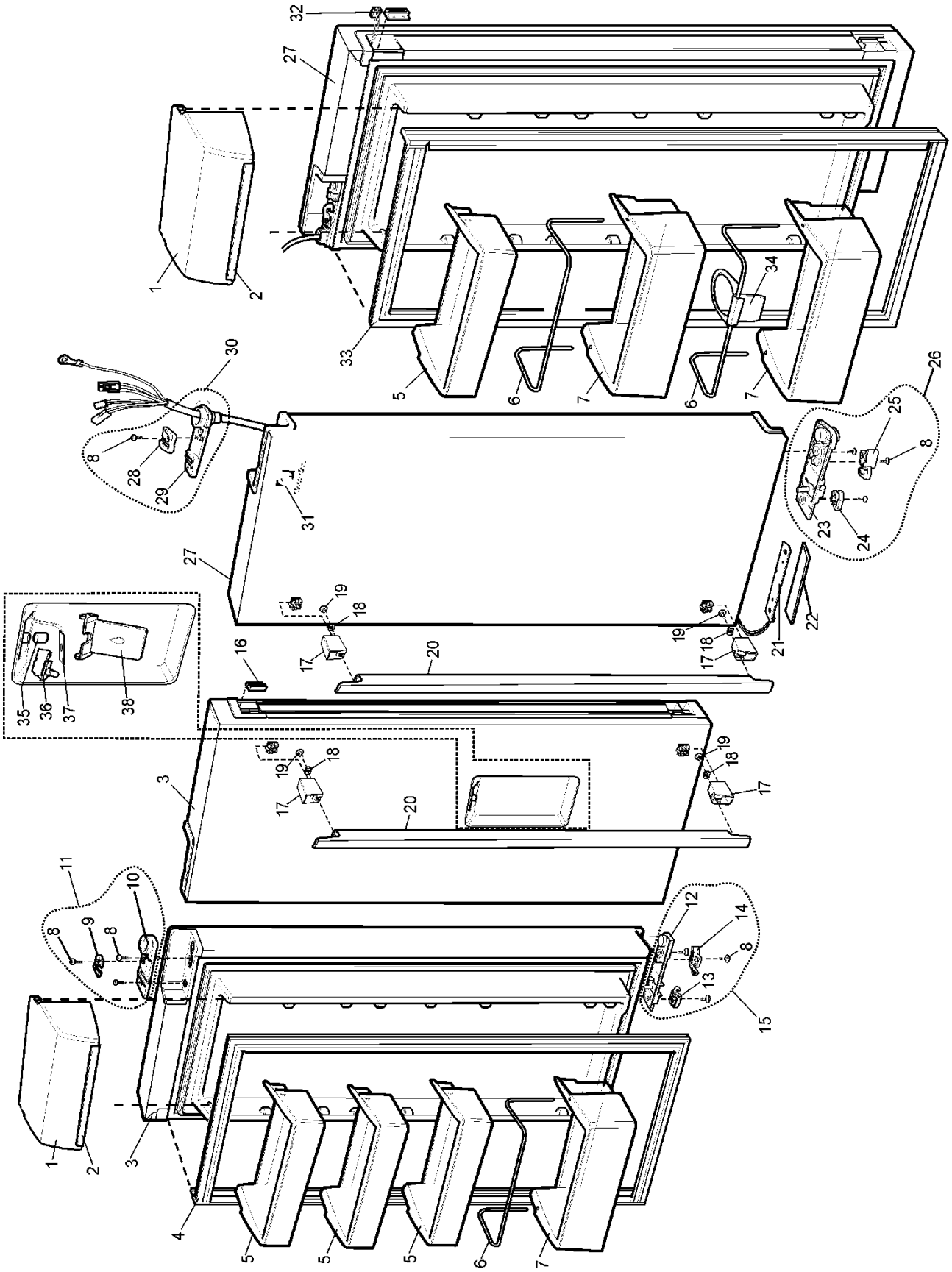

**MODEL: EHE5167SB**

**EX. VIEW DRAWING 6748**
**FREEZER ASSEMBLY**

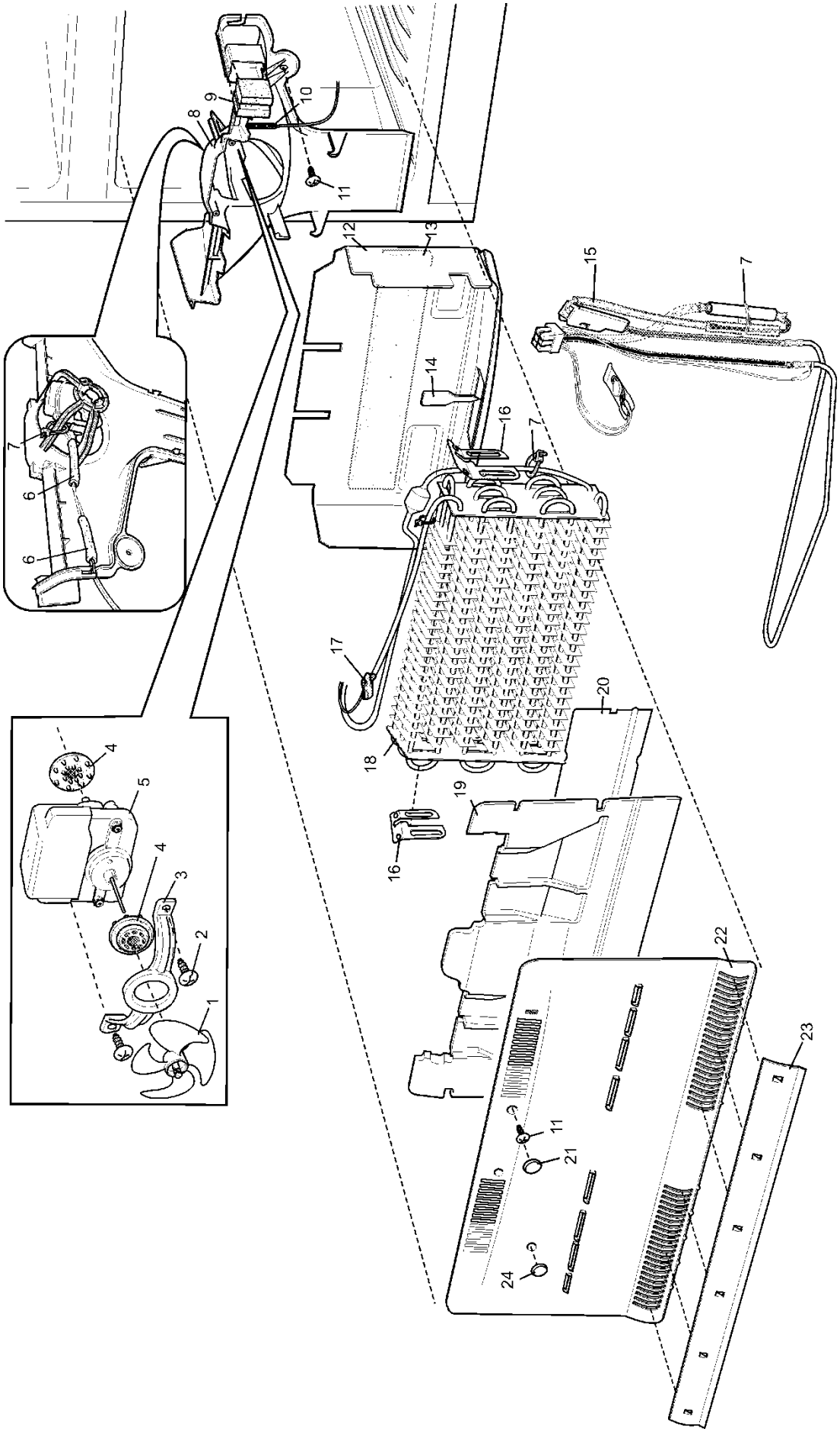

**MODEL: EHE5167SB**

**EX. VIEW DRAWING 8134**
**CABINET ASSEMBLY**
**FOOD COMPARTMENT**

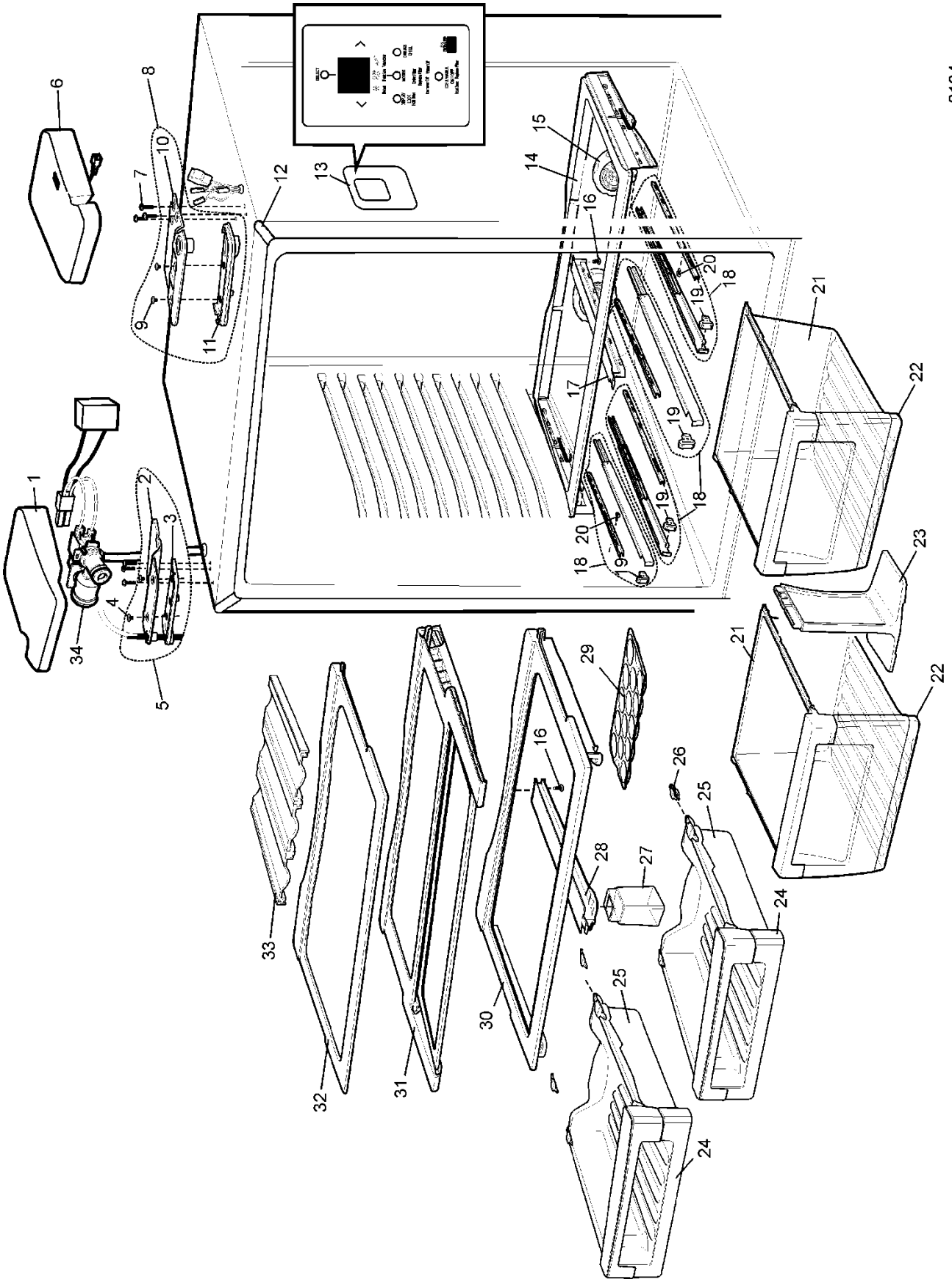

**MODEL: EHE5167SB**

**EX. VIEW DRAWING 8136**
**CABINET ASSEMBLY**
**FREEZER**

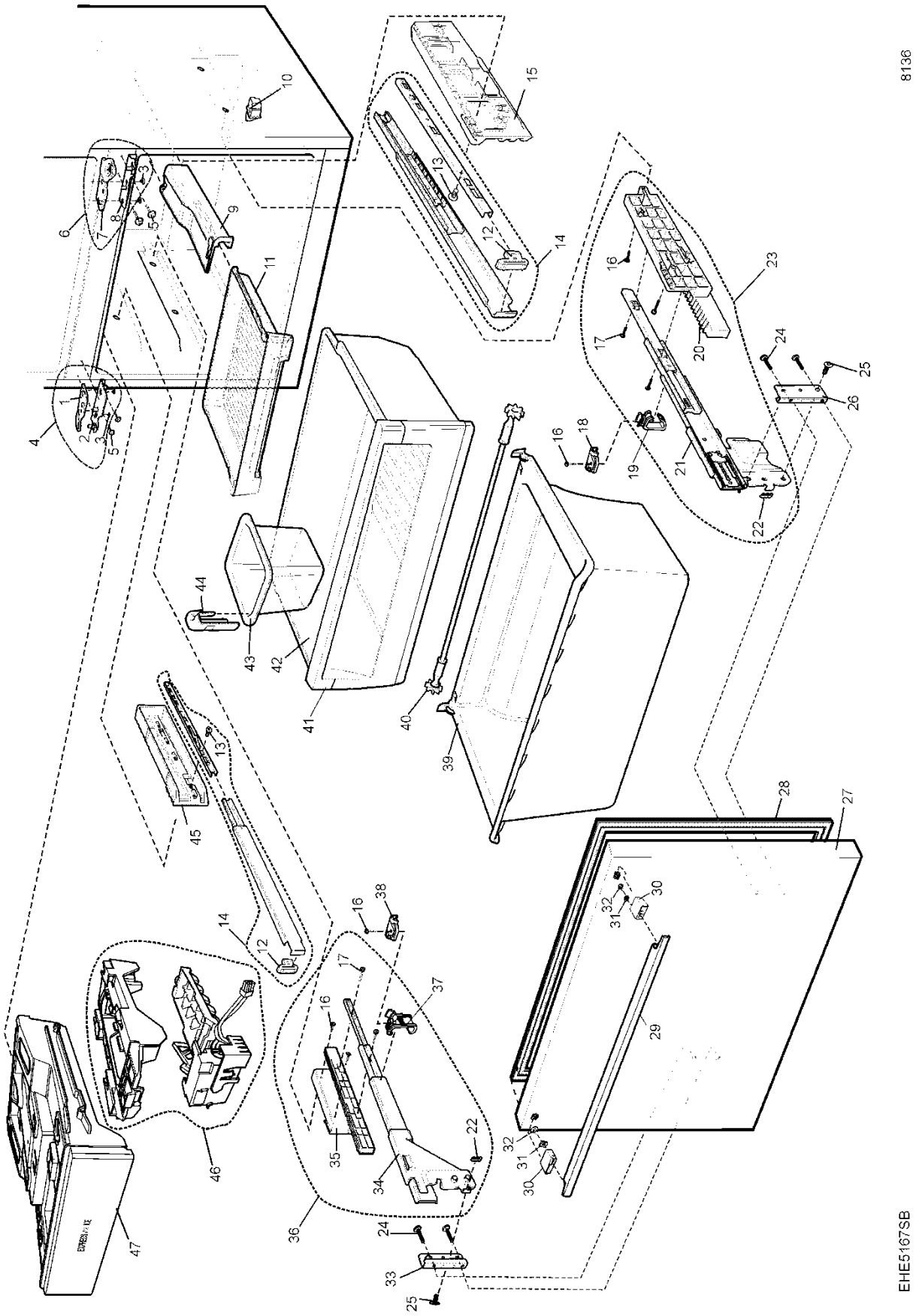

**MODEL: EHE5167SB**

**EX. VIEW DRAWING 8136**
**CABINET ASSEMBLY**
**FREEZER**

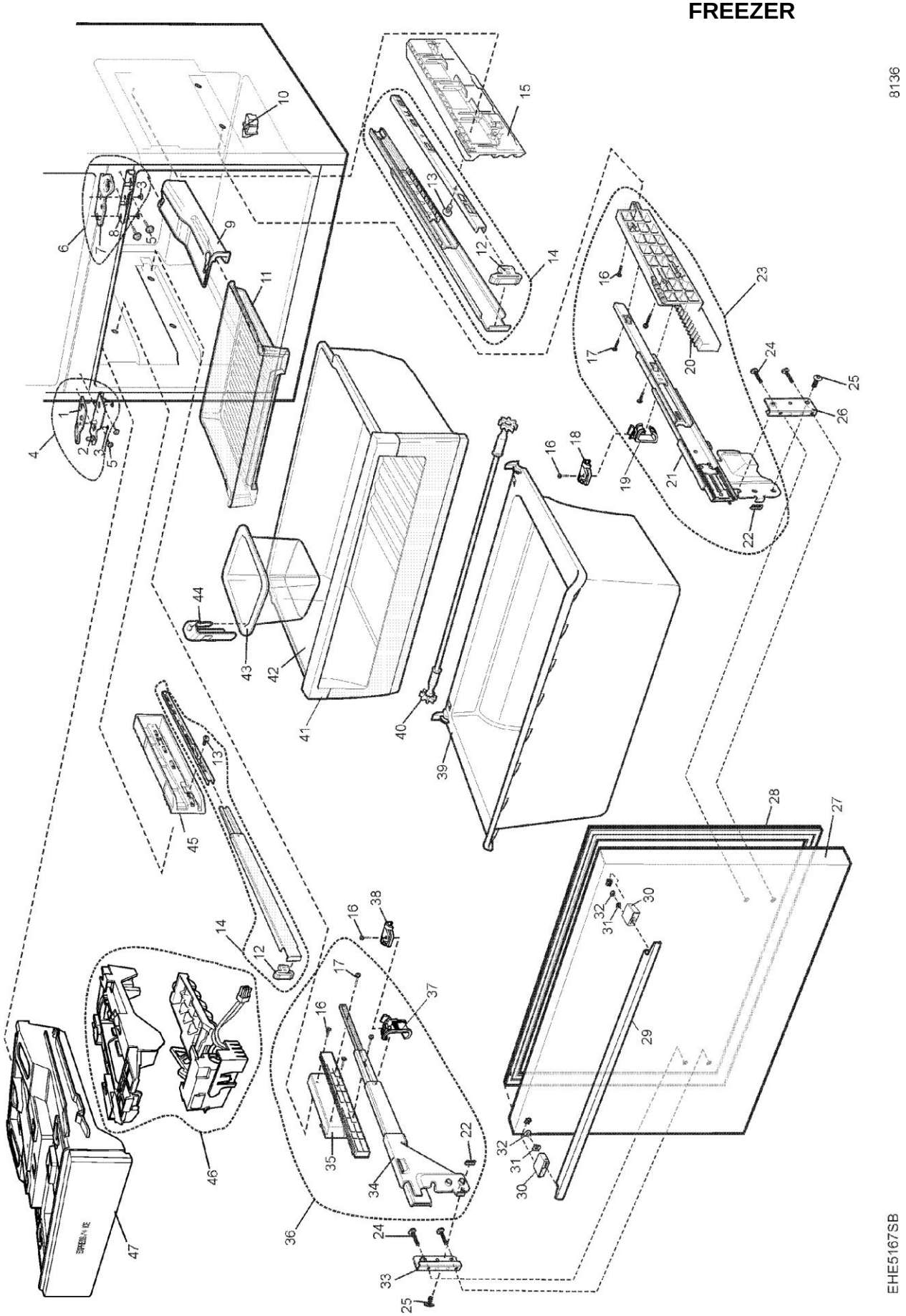

**MODEL: EHE5167SB**

**EX. VIEW DRAWING 7899**
**MACHINE COMPARTMENT**

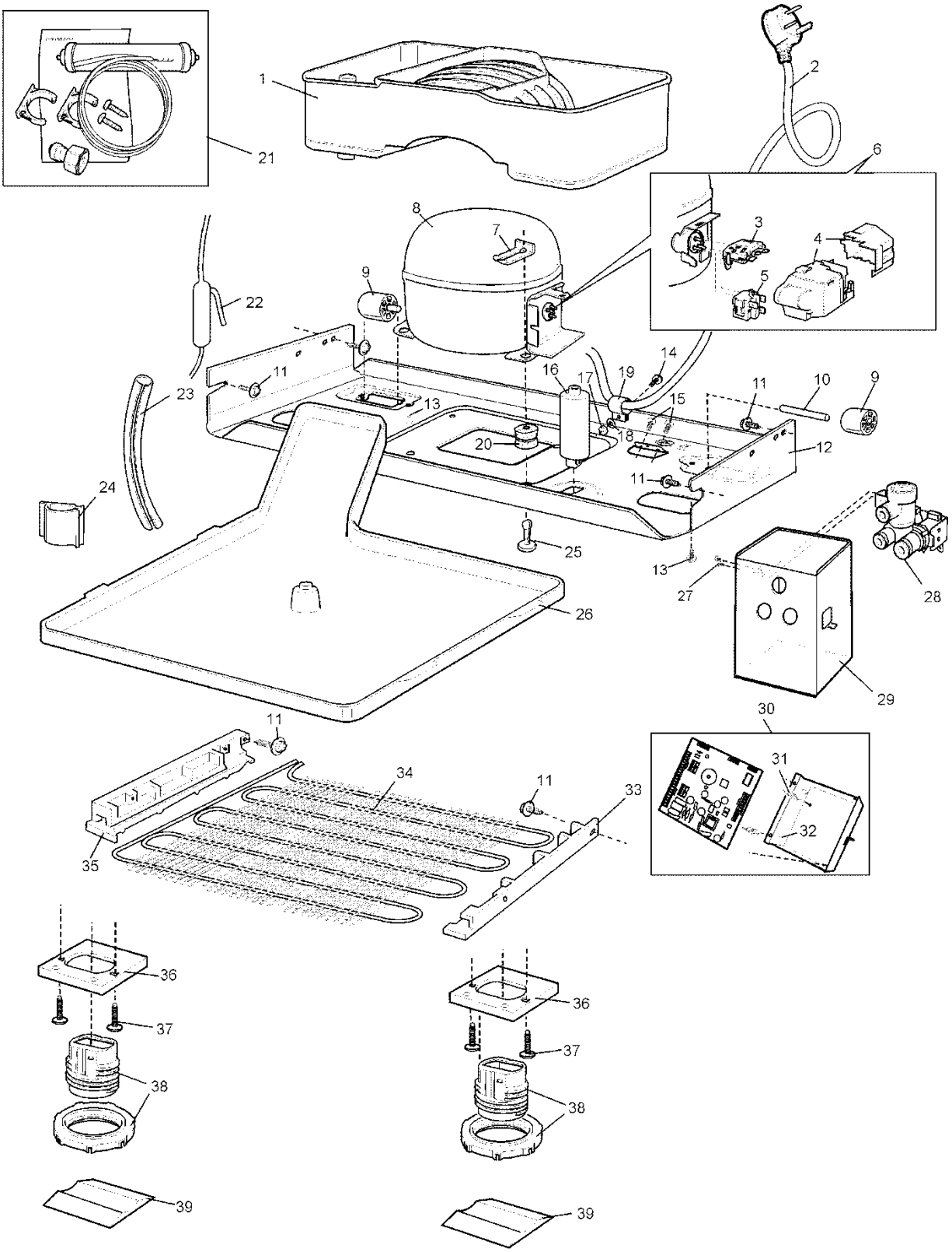


EHE5767SB

8137