Completed document

Model: T858M6OBC

PNC: 91609954600

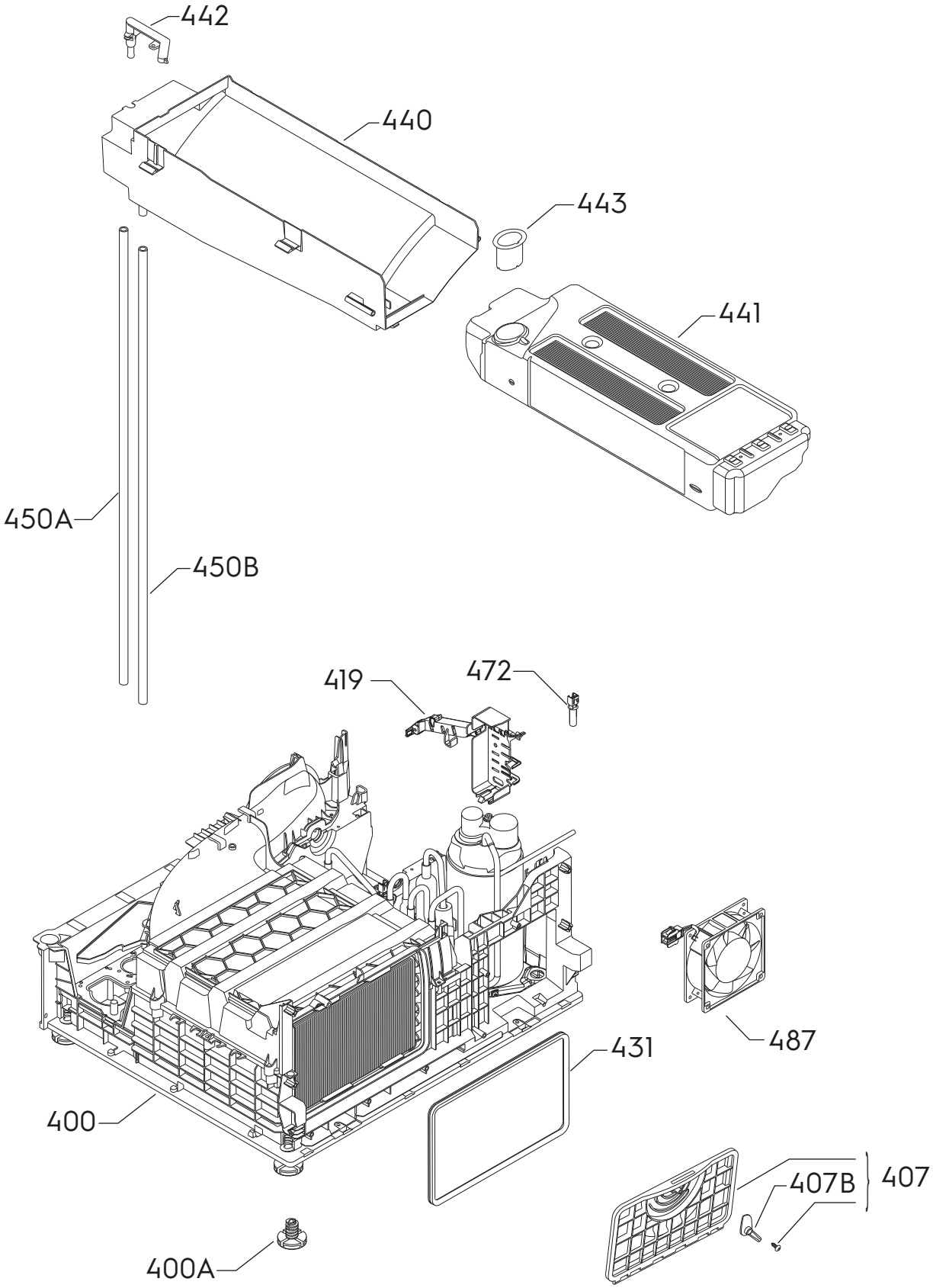

P09163091247

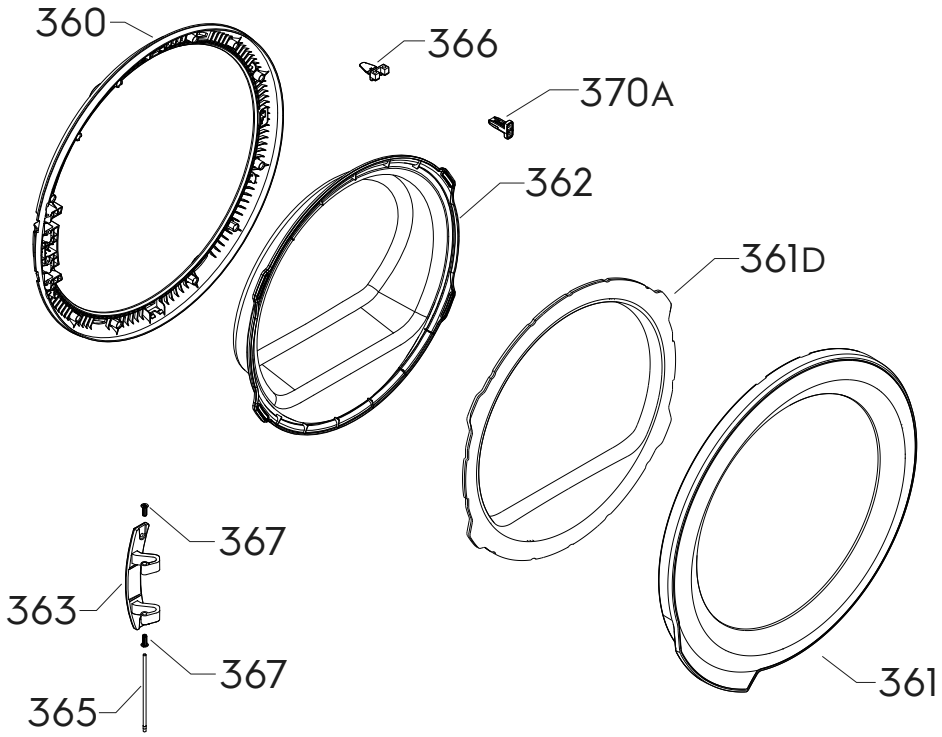

P09163093241

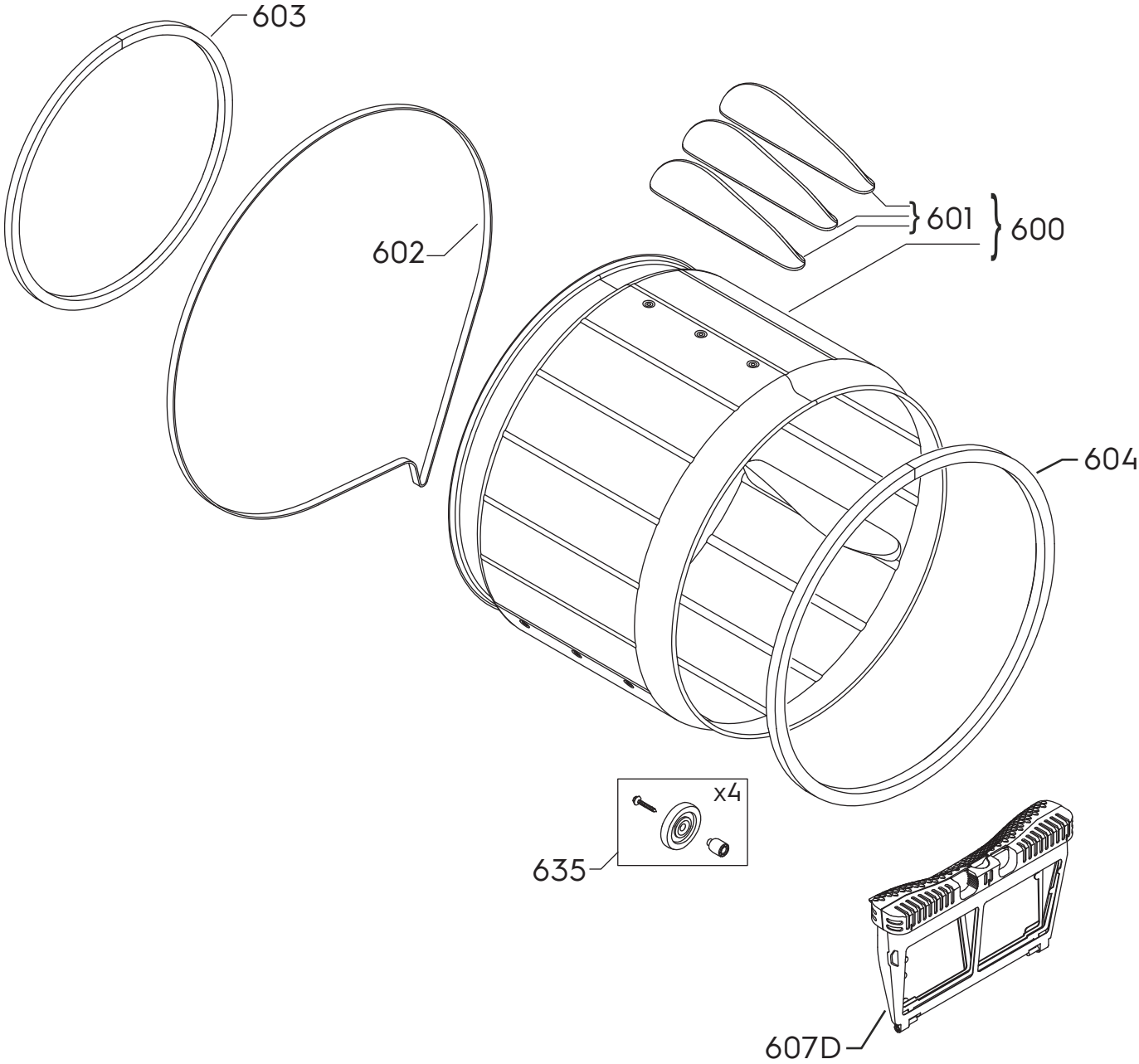

P09163078127

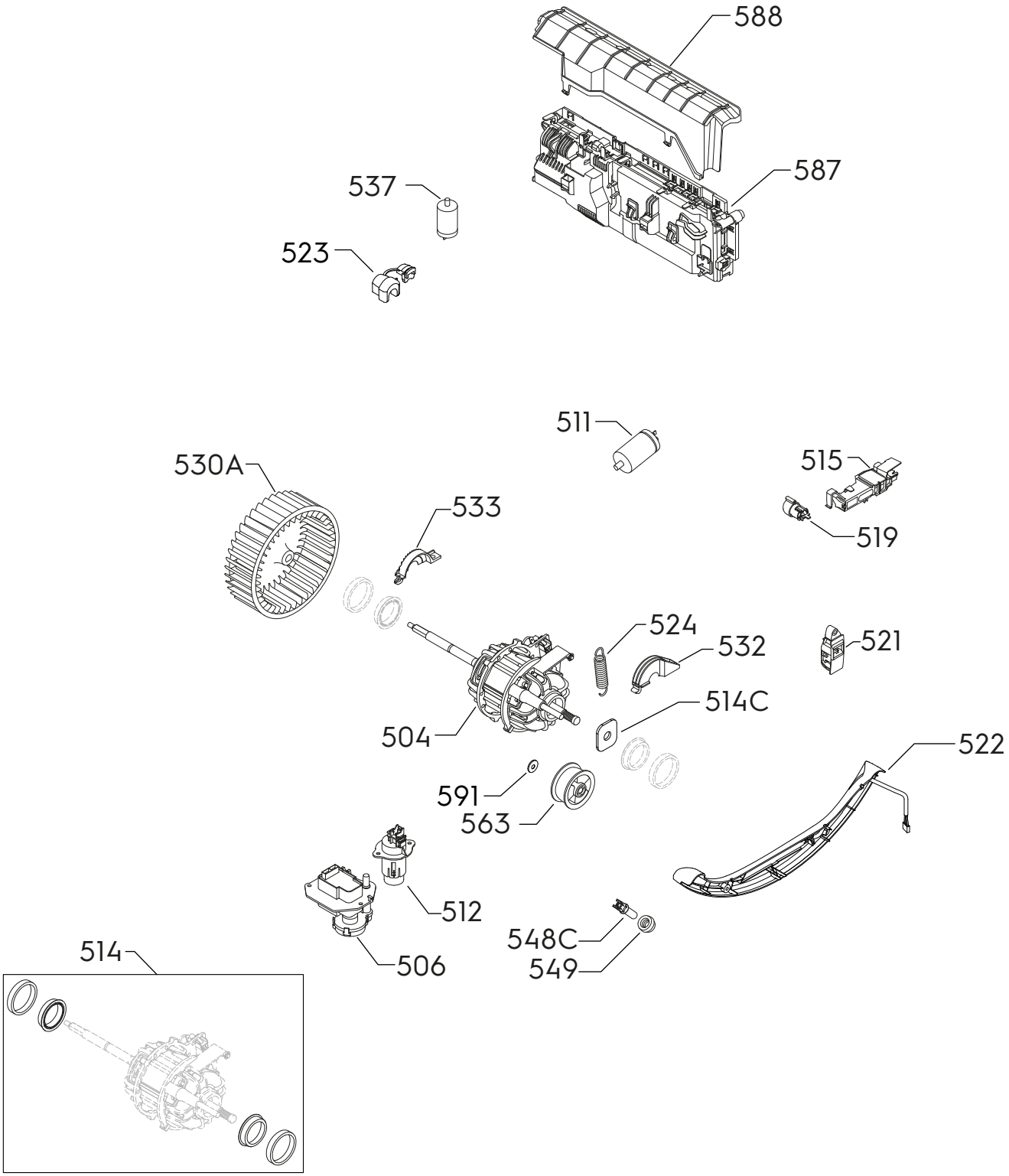

P09163086499

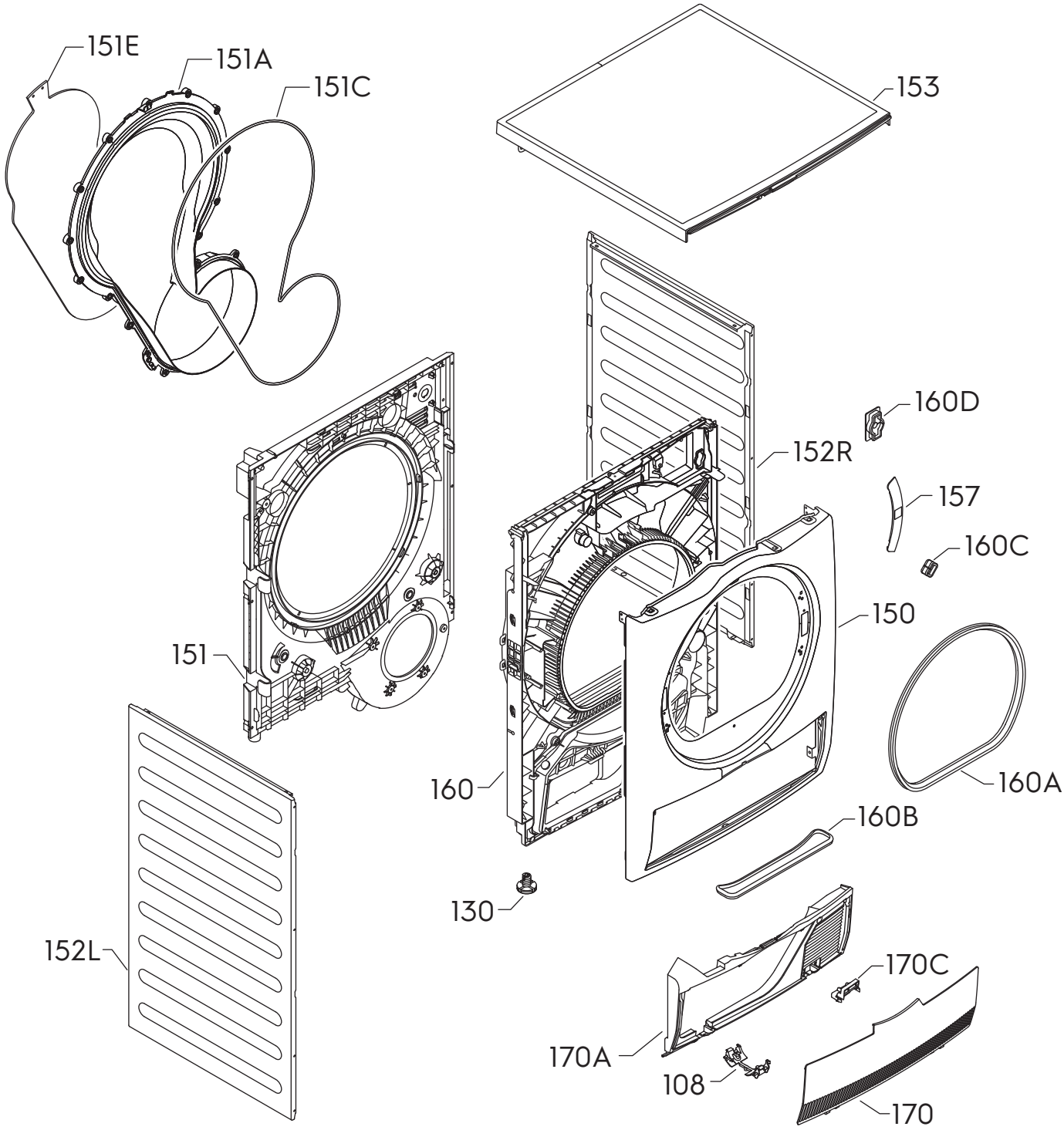

P09163078130

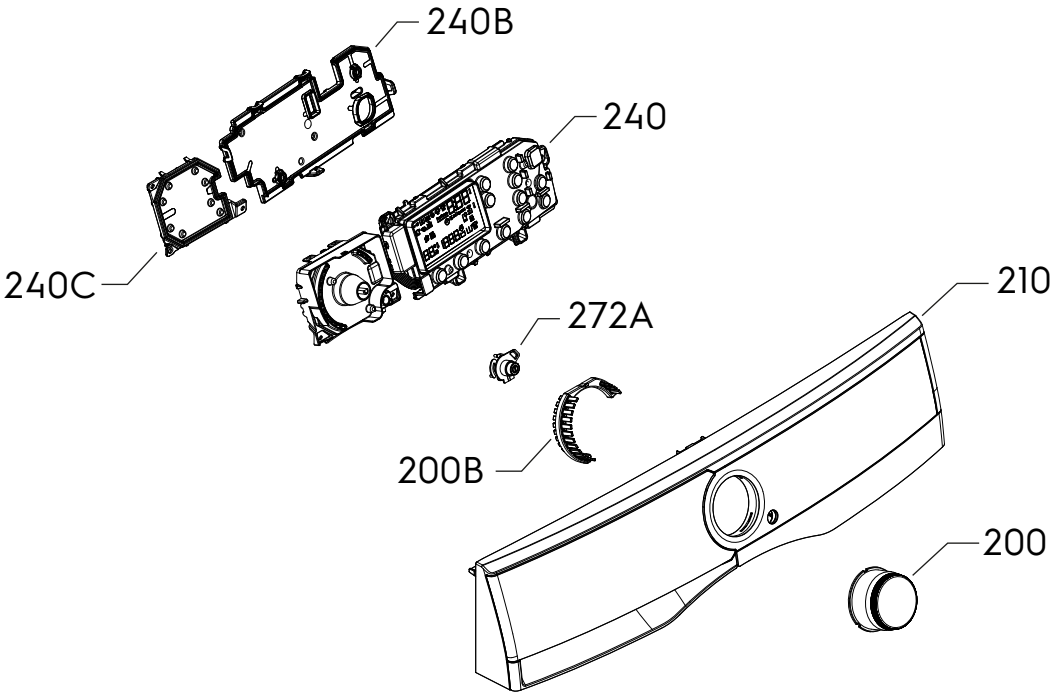

P09163093190