DE' LONGHI "AU/NZ" EC9865.BM

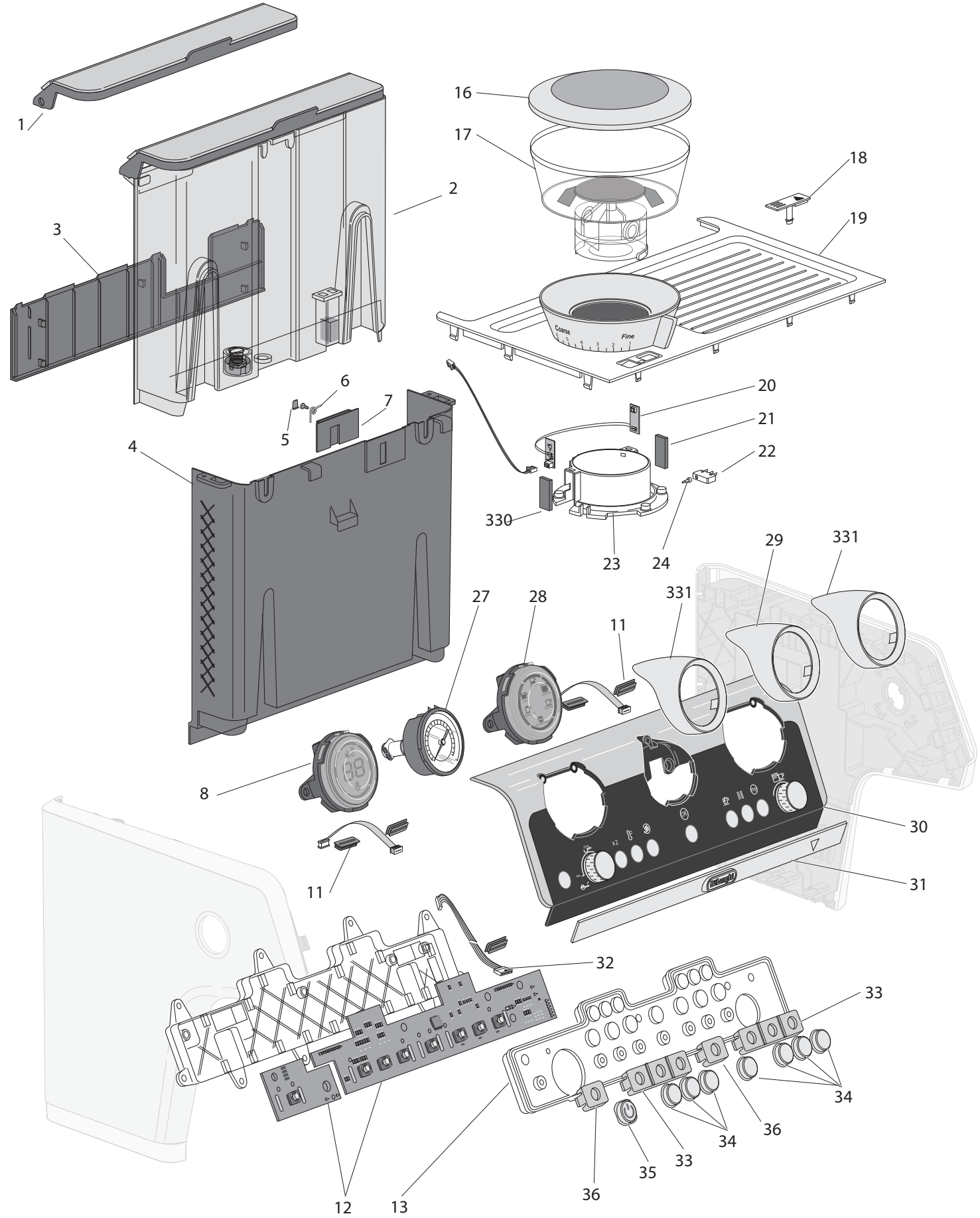

DE' LONGHI "AU/NZ" EC9865.BM

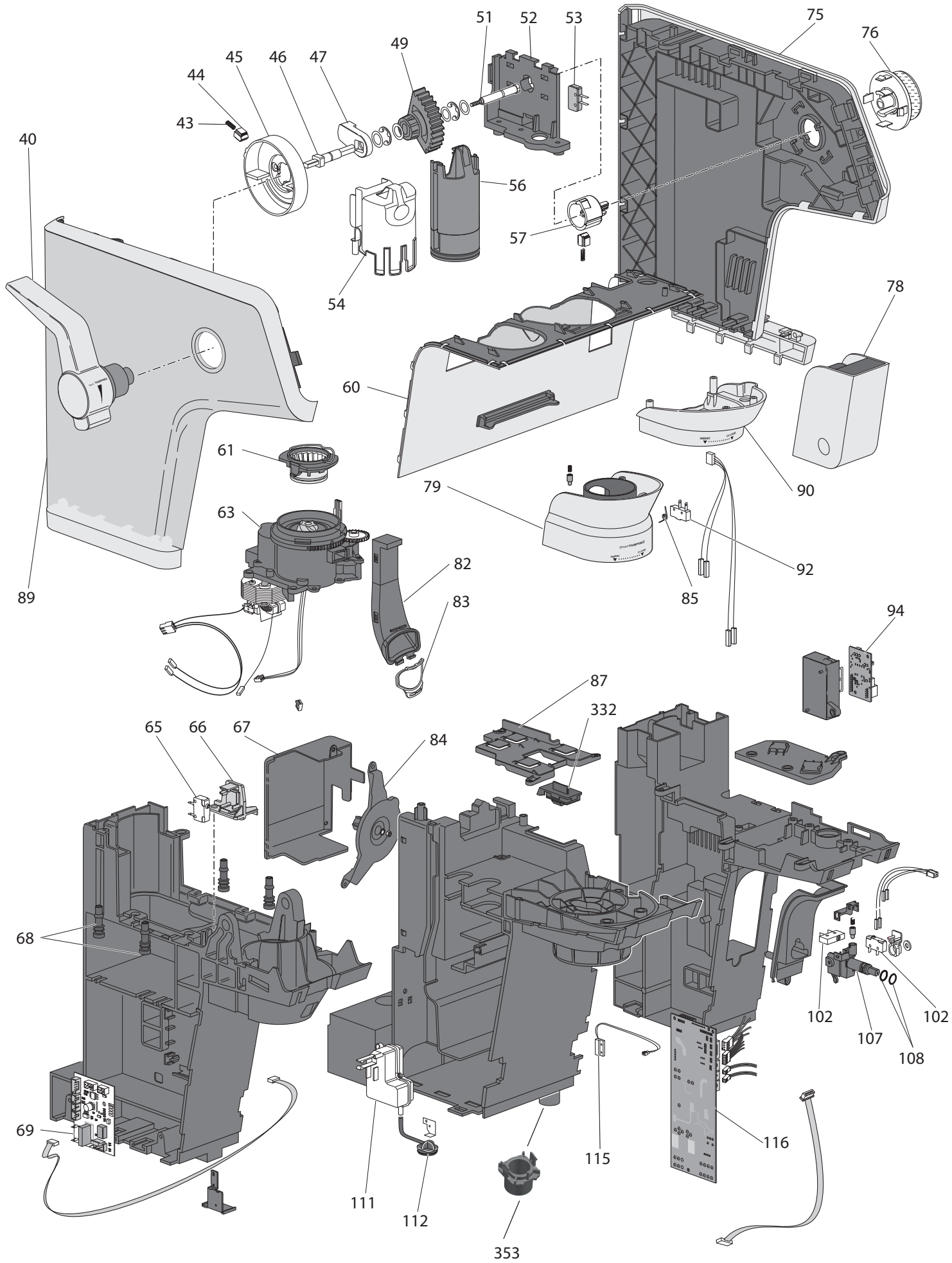

DE' LONGHI "AU/NZ" EC9865.BM

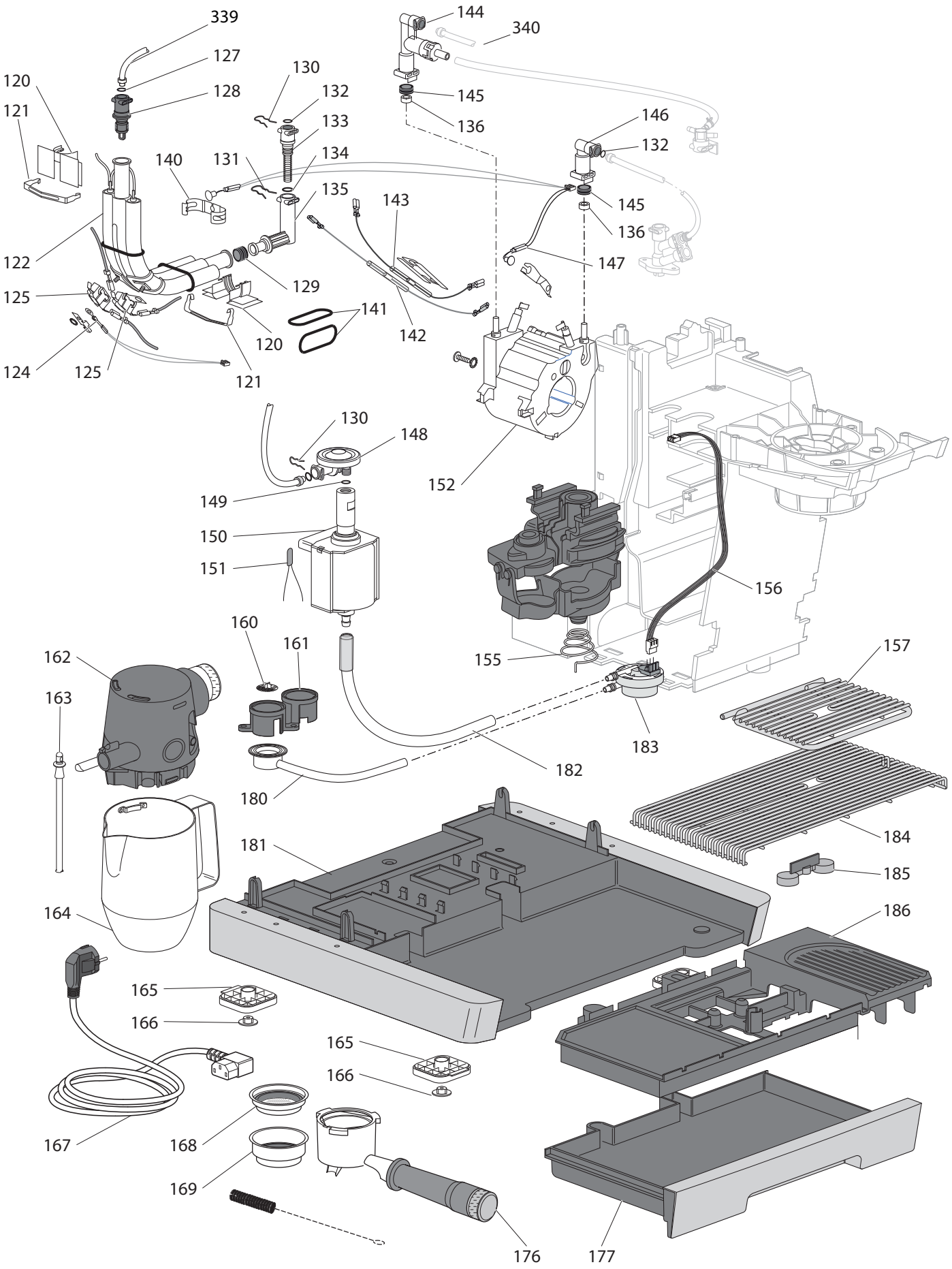
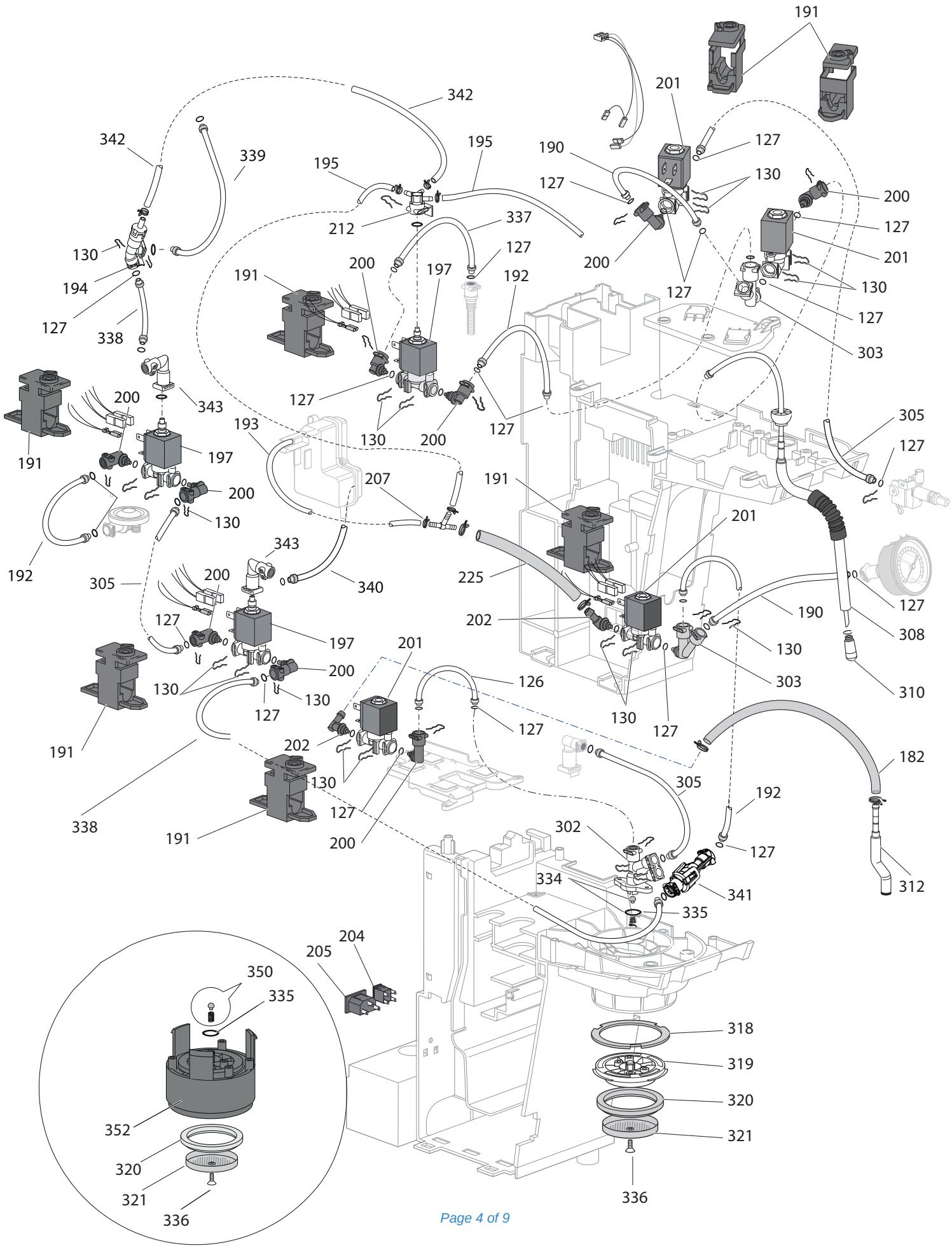
DE' LONGHI "AU/NZ" EC9865.BM