1. freezer

Exploded View

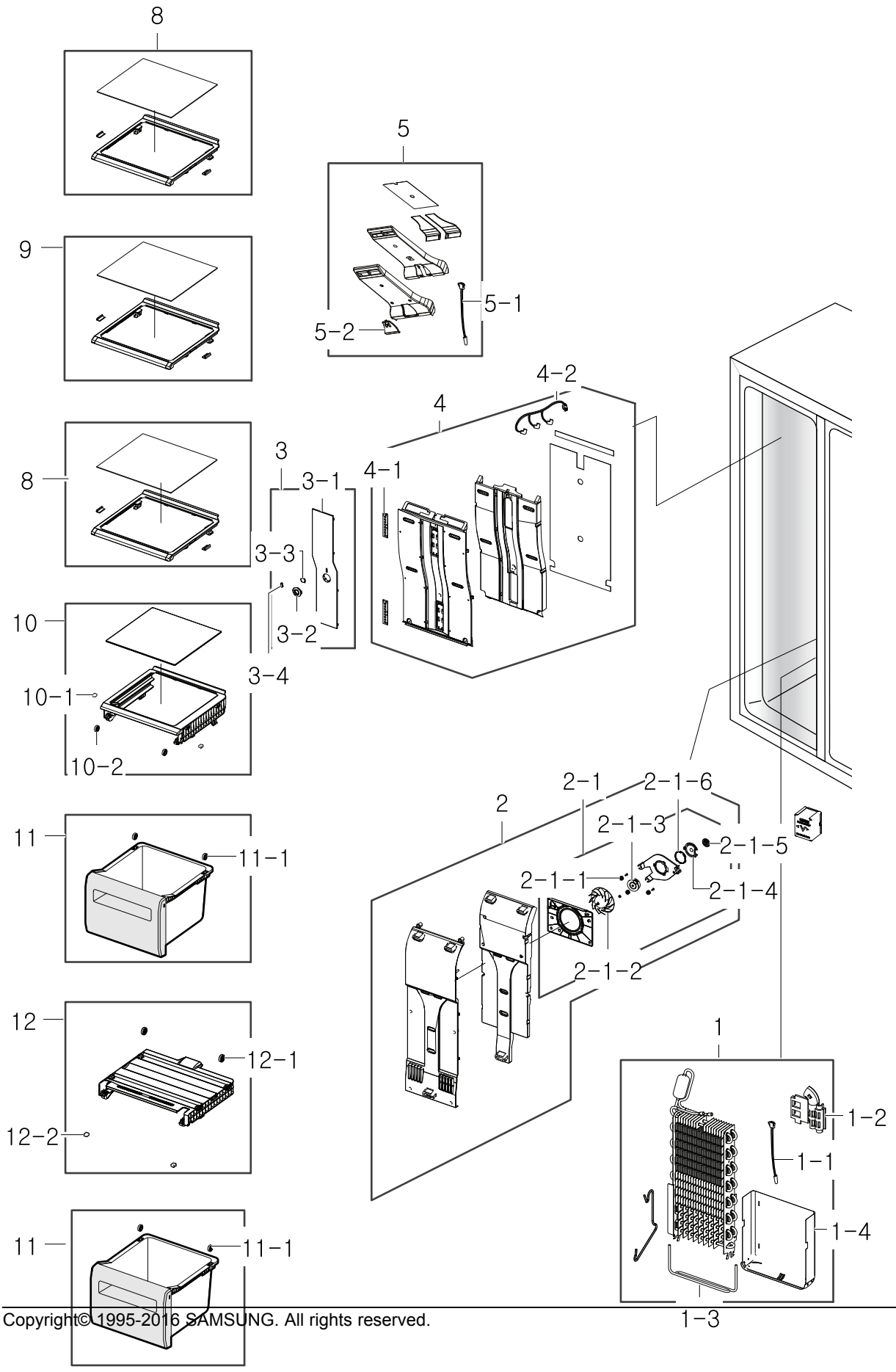

Copyright© 1995-2016 SAMSUNG. All rights reserved.

Copyright© 1995-2016 SAMSUNG. All rights reserved.

2. fridge

Exploded View

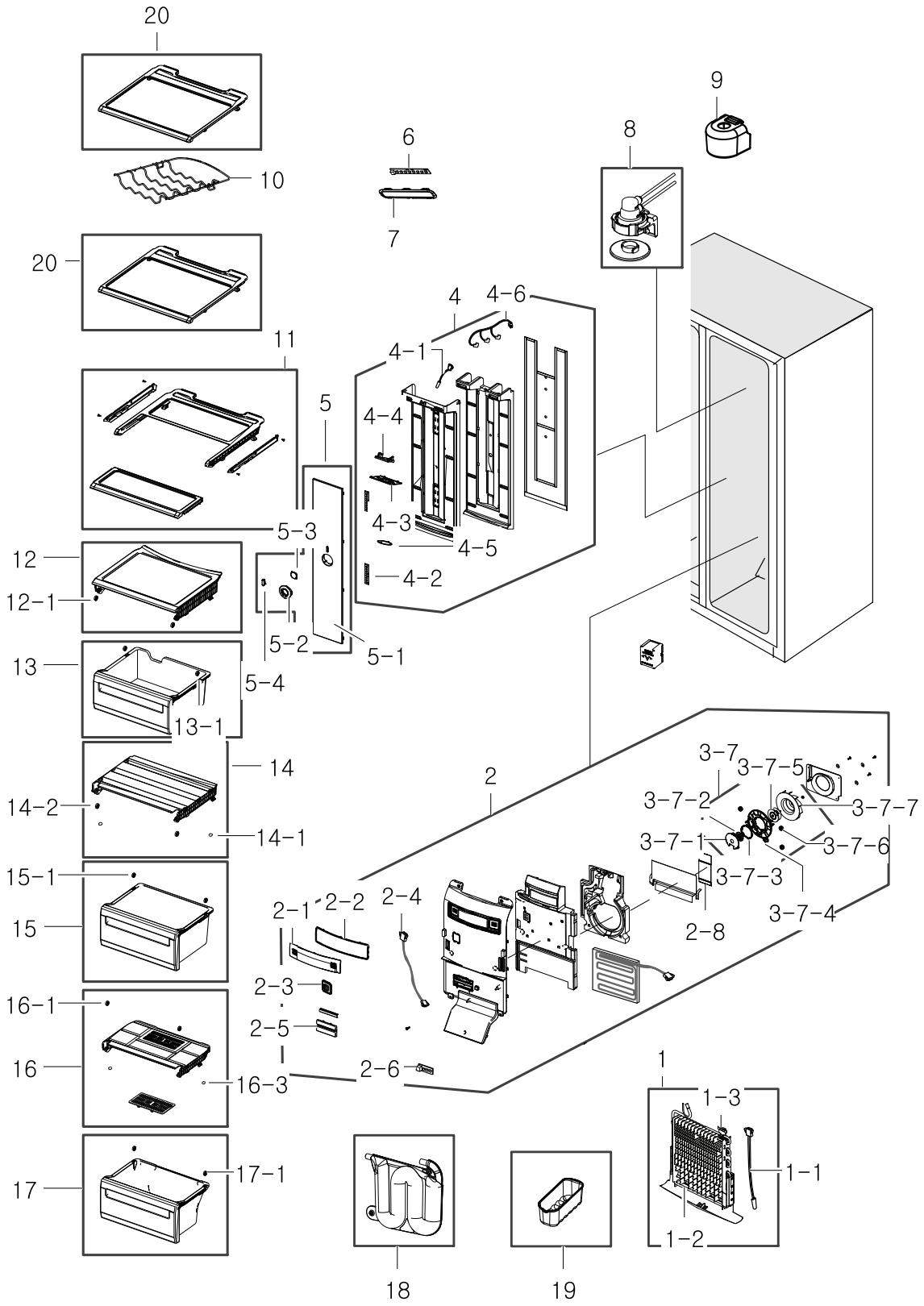

Copyright© 1995-2016 SAMSUNG. All rights reserved.

Copyright© 1995-2016 SAMSUNG. All rights reserved.

3. cabinet

Exploded View

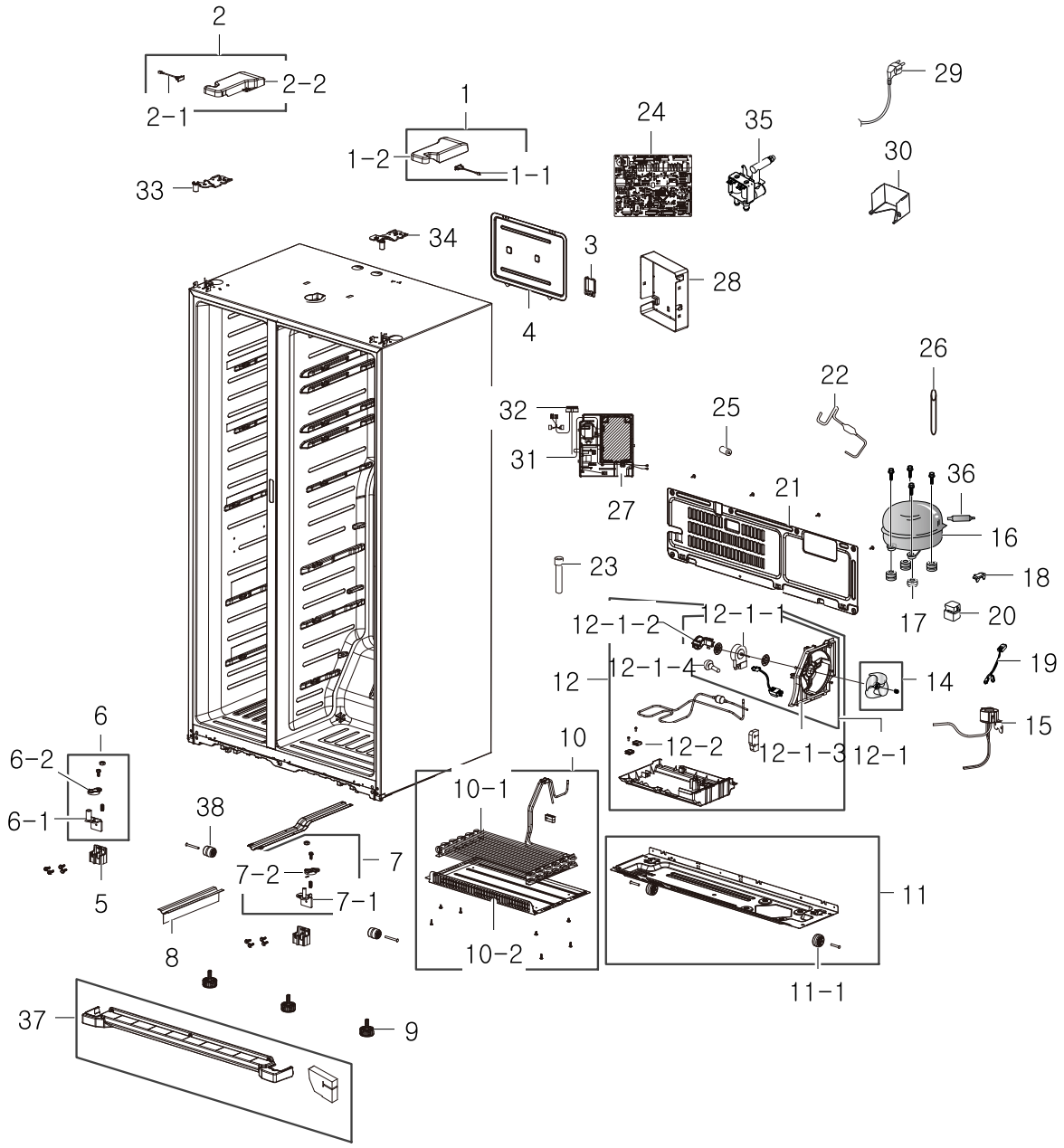

Copyright© 1995-2016 SAMSUNG. All rights reserved.

Copyright© 1995-2016 SAMSUNG. All rights reserved.

Copyright© 1995-2016 SAMSUNG. All rights reserved.

4. freezer door

Exploded View

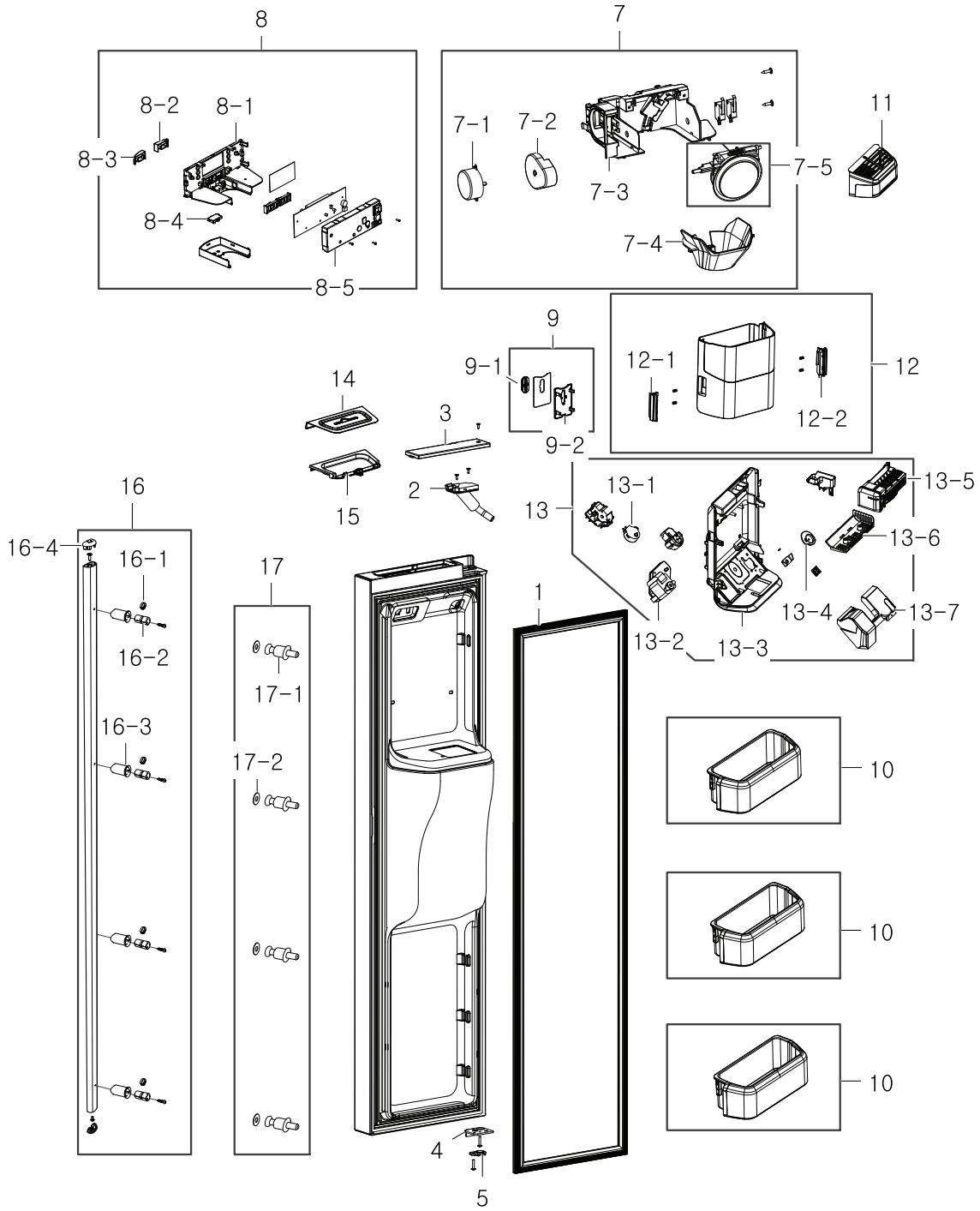

Copyright© 1995-2016 SAMSUNG. All rights reserved.

Parts List

No.	Parent	Lvl.	Loc.	Material Code	Description & Specification	SNA	Qty.
1	DA90-04395G	2	RR894	DA97-04568N	ASSY-GASKET DOOR FRE; GUGGENHEIM,SC-9748	SA	1
2	DA97-07731X	5	RO131	DA97-06542A	ASSY PIPE-WATER ICE; GUGGENHEIM(EXP),230V	SA	1
3	DA97-07731X	5	RO231	DA63-04341G	COVER-CAP DOOR FRE; GUGGENHEIM,HIPS,W61.3	SA	1
4	DA97-06533A	5	RD070	DA61-04195A	STOPPER-DOOR L; GUGGENHEIM,SHP1,T3.0,-,-,	SA	1
5	DA97-06533A	5	RD202	DA66-00558B	CAM HINGE-RISER UPP L; POLARIS,NY-66,BLAC	SA	1
7	DA90-04395G	2	RE092	DA97-06473E	ASSY CASE-ICE ROUTE; GGH,AC220/240	SA	1
7-1	DA97-11095A	3	RF261	DA31-00079A	MOTOR GEARED-DISP; 15.2/18.2 rpm,50/60Hz,	SA	1
7-2	DA97-06473E	3	RD199	DA66-00309A	CAM-GEAR MOTOR; QUEEN,POM,-,-,NTR,-,-,-,-	SA	1
7-3	DA97-06473E	3	RE130	DA61-04373A	CASE-ICE ROUTE; GUGGENHEIM,ABS,-,W170.5,L	SA	1
7-4	DA97-06473E	3	RD062	DA61-04377A	GUIDE-ICE DISPENSER; GUGGENHEIM,ABS,-,W12	SA	1
7-5	DA97-06473E	3	RD068	DA97-00883E	ASSY COVER-ICE ROUTE; QUEEN-PJT,-,-,-,-,-	SA	1
8	DA90-04428C	2	RI027	DA97-06469E	ASSY COVER-ICE DUCT FRE; GUGGENHEIM	SA	1
8-1	DA97-06469E	3		DA61-04367A	PLATE-ICE DUCT L; GUGGENHEIM,HIPS,T1.0,-,	SNA	1
8-2	DA97-07881X	3	RE159	DA64-02566A	BUTTON-ICE DISPENSER; AW2,ABS,42.6*23.0,-	SA	1
8-3	DA97-07881X	3	RE158	DA64-02567A	BUTTON-WATER DISPENSER; AW2,ABS,42.6*23.0	SA	1
8-4	DA97-07881X	3	RI147	DA97-02847A	ASSY-LAMP DOOR; EPEL,LED TYPE,-,-	SA	1
8-5	DA97-07881X	3	RO464	DA63-04361B	COVER-PCB PANEL REAR; GGH,HIPS,NTR	SA	1
9	DA90-04395G	2	RI382	DA97-06478E	ASSY COVER-MICRO SWITCH; GUGGENHEIM,-,-,W	SA	1
9-1	DA97-06478E	3	RQ615	DA66-00600C	LEVER-PUSH; GUGGENHEIM,SILICON,T0.5,W29.3	SA	1
9-2	DA97-06569P	3	RM047	DA61-04366B	FIXER-LEVER CUBE; GGH,STAINLESS-STS304,T0	SNA	1
10	DA90-04464B	2	RR450	DA97-06194D	ASSY GUARD FRE-MID; NEXT08,-,-,-,-,NON-PR	SA	3
11	DA90-04457C	2	RM003	DA97-06568C	ASSY COVER-ICE MAKER; GUGGENHEIM(EXP),COO	SA	1
12	DA90-04457C	2		DA97-06569P	ASSY CASE-ICE BUCKET; GGH,BLADE(2-WAY),IN	SA	1

Copyright© 1995-2016 SAMSUNG. All rights reserved.

No.	Parent	Lvl.	Loc.	Material Code	Description & Specification	SNA	Qty.
12-1	DA97-06569P	3	RM051	DA66-00587A	LEVER-BUCKET L; GUGGENHEIM,ABS,29.8,76.7,	SA	1
12-2	DA97-06569P	3	RM052	DA66-00588A	LEVER-BUCKET R; GUGGENHEIM,ABS,29.8,76.7,	SA	1
13	DA90-04457C	2	RF416	DA97-11095A	ASSY CASE-AUGER MOTOR; GUGGENHEIM(EXP),CO	SA	1
13-1	DA97-11095A	3	RF261	DA31-00079A	MOTOR GEARED-DISP; 15.2/18.2 rpm,50/60Hz,	SA	1
13-2	DA97-11095A	3	RF434	DA31-00210E	MOTOR GEARED-AUGER; ISG-3245SSB,1/201.5,2	SA	1
13-3	DA97-11095A	3	RF417	DA61-04363B	CASE-AUGER MOTOR; HM10,GGH,ABS,171.8,415.	SA	1
13-4	DA97-11095A	3	RF185	DA66-00589A	CAM-LEVER CUBE; GUGGENHEIM,POM,T17.9,55	SA	1
13-5	DA97-11095A	3	RM061	DA97-07549A	ASSY ICE MAKER; GUGGENHEIM,220~240V,50Hz,	SA	1
13-6	DA97-11095A	3	RI379	DA63-04355A	COVER-HEATER ICE MAKER; GUGGENHEIM,ABS,47	SA	1
13-7	DA97-11095A	3	RF251	DA63-04362B	COVER-MOTOR AUGER SUB; GUGGENHEIM,HIPS,NT	SA	1
14	DA90-04395G	2	RO489	DA63-04372E	TRAY-DISPENSER; GUGGENHEIM,ABS,-,W239.4,L	SA	1
15	DA90-04395G	2	RO486	DA61-04386D	CASE-TRAY DISPENSER; GUGGENHEIM,ABS,-,W23	SA	1
16	DA90-04407F	2	RO140	DA97-06632L	ASSY HANDLE-BAR; GUGGENHEIM,AL,T1.5,REAL	SA	1
16-1	DA97-06632L	3	RO587	DA61-03636A	STOPPER-HANDLE; CULLINAN,SK5,-,-,-,-,-	SA	4
16-2	DA97-06632L	3	RO485	DA61-03726A	SUPPORT-HANDLE; HERMES,NY66,-,-,-,NTR,-	SA	4
16-3	DA97-06632L	3	RO527	DA67-01673G	CAP-SUPT HANDLE; JM,ABS,-,-,-,MANHATTAN P	SA	4
16-4	DA97-06632L	3	RK011	DA67-02051A	CAP-HANDLE; GUGGENHEIM,ABS,52.0,W31.8,L17	SA	1
17	DA90-04407F	2	RO170	DA97-05529C	ASSY-BRACKET HANDLE; HREMES-PJT,SWCH10A,-	SA	4
17-1	DA97-05529C	3	RO171	DA61-03725B	BRACKET-HANDLE; HERMES,SWCH10A,-,-,L31,-,	SA	4
17-2	DA97-05529C	3	RJ720	DA63-03840A	GROMMET-HANDLE; HERMES,SILICON,T1,-,-,-,-	SA	4

Copyright© 1995-2016 SAMSUNG. All rights reserved.

5. fridge door

Exploded View

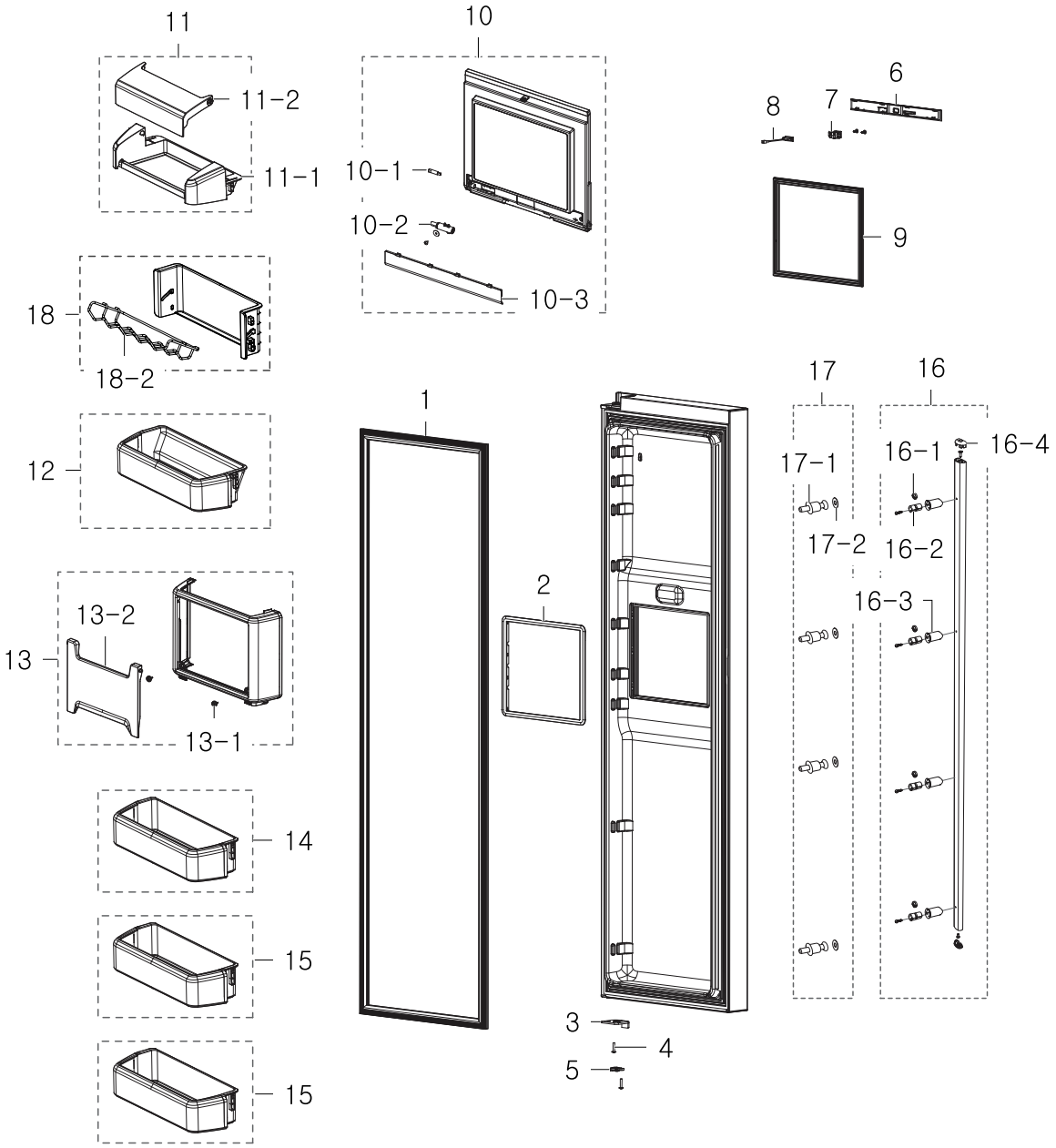

Parts List

No.	Parent	Lvl.	Loc.	Material Code	Description & Specification	SNA	Qty.
1	DA90-04407F	2	RE016	DA97-04568P	ASSY-GASKET DOOR REF; GUGGENHEIM,SC-9748	SA	1
2	DA90-04407F	2	RE312	DA64-02931A	TRIM-CASE HOME BAR OUT; GUGGENHEIM,ABS,-,	SA	1
3	DA97-06537F	5	RE439	DA61-04196A	STOPPER-DOOR R; GUGGENHEIM,SHP1,T3.0,-,-,	SA	1

Copyright© 1995-2016 SAMSUNG. All rights reserved.